The elevations shown in these plans are based on the National Geodetic Survey (NGS) North American Vertical Datum of 1988 (NAVD88).

STATE OF	PROJECT	SHEET NO.	TOTAL SHEETS
S.D.	Reference		

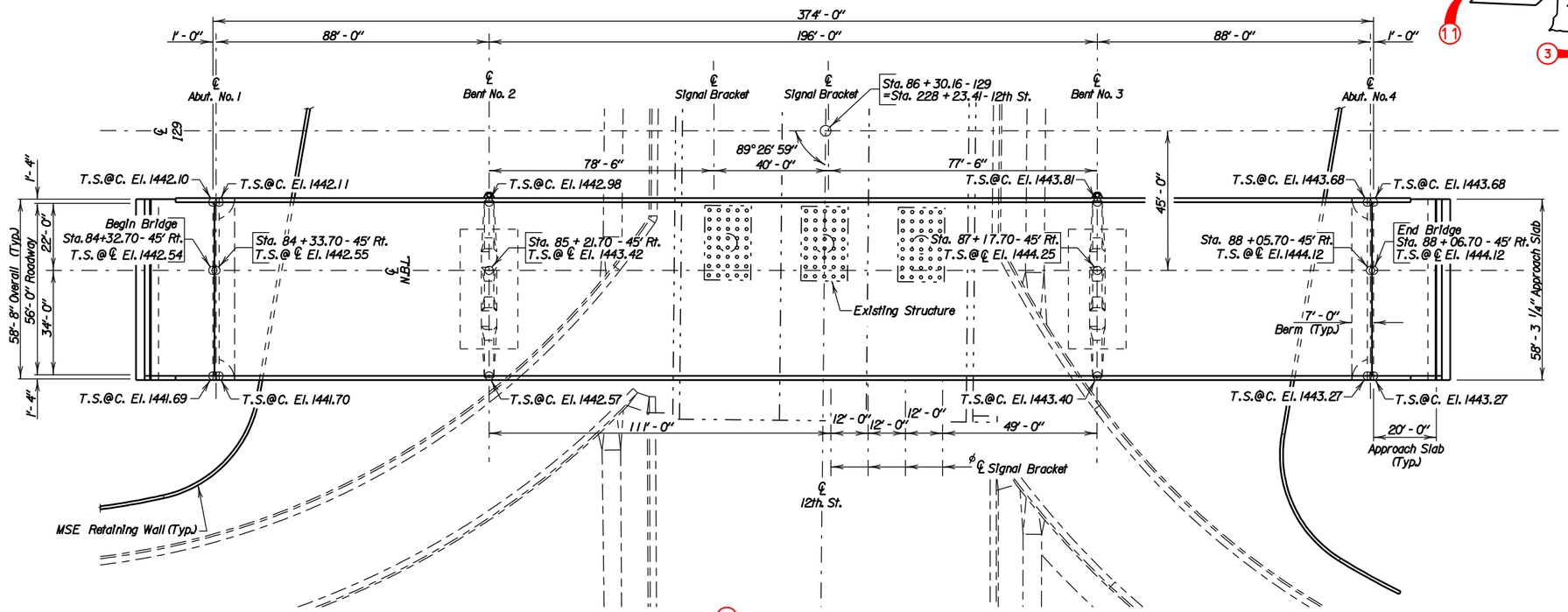

4 PLAN

NOTE: T.S.@℄ El. = Top of Slab at Centerline Elevation.
T.S.@C. El. = Top of Slab at Curb Elevation.

ϕ Signal Brackets
See Sheet No. 27 of 32.

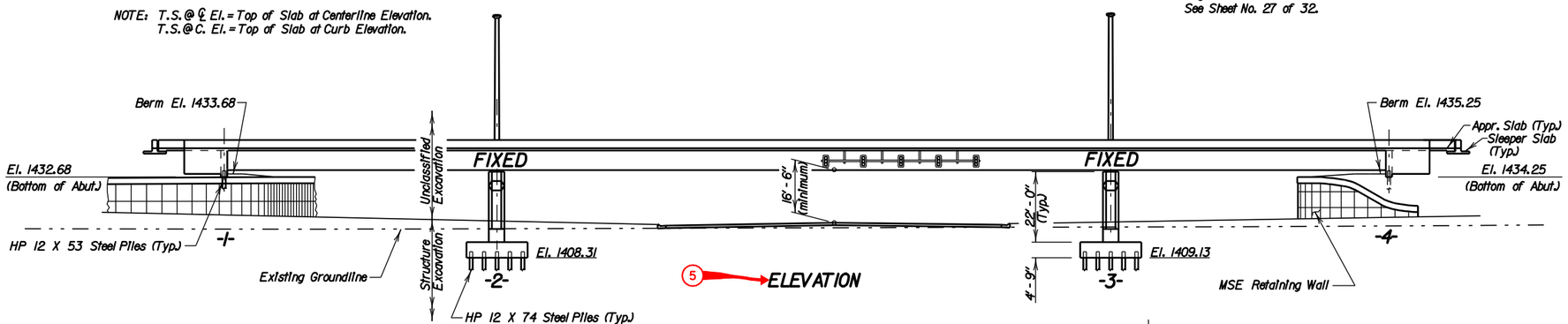

5 ELEVATION

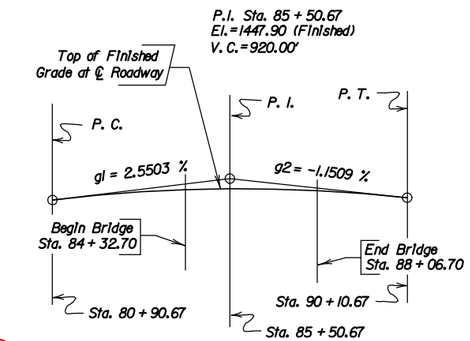

6 VERTICAL CURVE DATA (I29)

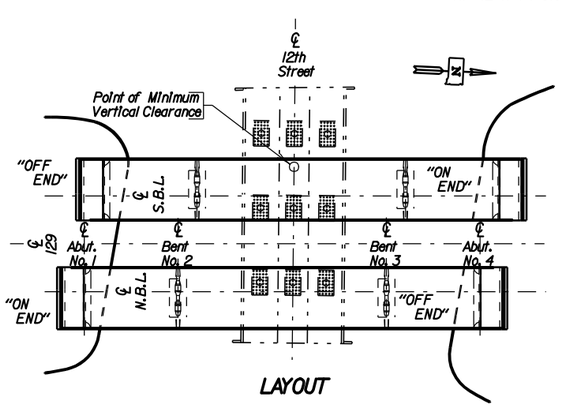

LAYOUT

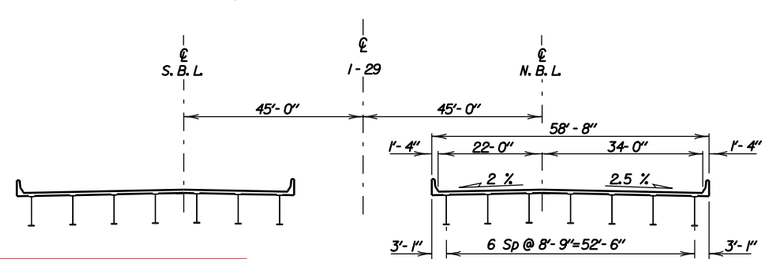

TYPICAL SECTION

REQUIRED LIST	
1 Title Block	6 Horizontal/Vertical Curve
2 Project Block	7 Survey Datum Box
3 Index of Bridge Sheets	8 Design Firm or Office
4 Plan View	9 Hydraulic Data (if applicable)
5 Elevation View	10 North Arrow

-X271-

INDEX OF BRIDGE SHEETS

Sheet No. 1 - General Drawing
Sheet No. 2 - Estimate of Structure Quantities & Notes
Sheet No. 3 - Notes (Continued)
Sheet No. 4 - Notes (Continued)
Sheet No. 5 - Notes (Continued)
Sheet No. 6 - Notes (Continued)
Sheet No. 7 - Notes (Continued)
Sheet No. 8 - Subsurface Investigation & Piling Layout
Sheet No. 9 - Abutment No. 1 Details
Sheet No. 10 - Abutment No. 4 Details
Sheet No. 11 - Abutment Details (Continued)
Sheet No. 12 - Bent No. 2 & No. 3 Details
Sheet No. 13 - Bent No. 2 & No. 3 Details (Continued)
Sheet No. 14 - Bent No. 2 & No. 3 Details (Continued)
Sheet No. 15 - Superstructure Details
Sheet No. 16 - End Block and Barrier Curb Details
Sheet No. 17 - Girder Layout and Details
Sheet No. 18 - Diaphragm Details
Sheet No. 19 - Framing Diagram, Camber & Erection Data
Sheet No. 20 - Slab Form Elevations
Sheet No. 21 - Details of Bolted Field Splice and Bearings
Sheet No. 22 - Details of Bridge End Backfill
Sheet No. 23 - Details of Approach Slab Adj. to Bridge
Sheet No. 24 - Details of Approach Slab Adj. to Bridge (Continued)
Sheet No. 25 - Approach Slab Joint Details
Sheet No. 26 - Slope Protection Details
Sheet No. 27 - As-Built Elevation Survey
Sheet No. 28 - Details of Standard Plate No. 460.02 & 460.05
Sheet No. 29 - Details of Standard Plate No. 510.30 & 510.40
Sheet No. 30 - Details of Standard Plate No. 630.92

1 GENERAL DRAWING
FOR
(NORTHBOUND LANES)

374'-0" CONT. COMP. GIRDER BRIDGE

56'-0" ROADWAY — SEC. 13/24-T101N-R50W
OVER 12th STREET — 0° SKEW
STR. NO. 50-176-210 — IM 29-3(76) 78
STA. 84+32.70 TO STA. 88+06.70 — HS25-44
PCEMS NO. 3443 — (& ALT.)

MINNEHAHA COUNTY
S. D. DEPT. OF TRANSPORTATION

- X271 - DECEMBER 2003 1 OF 30

PLANS BY : OFFICE OF BRIDGE DESIGN, SOUTH DAKOTA DEPARTMENT OF TRANSPORTATION

DESIGNED BY	DRAWN BY	CHECKED BY	APPROVED
HE	BK	DC	John C. Cole
STEEL	Steel 01		BRIDGE ENGINEER

STATE OF	PROJECT	SHEET NO.	TOTAL SHEETS
S.D.	Reference		

Revised 1-9-06 HE

3

ESTIMATE OF STRUCTURE QUANTITIES

DESCRIPTION	QUANTITY	UNIT	REMARKS
Bridge Elevation Survey	Lump Sum	LS	See Sht. 29 of 32
Structural Steel, Install	Lump Sum	LS	
Structural Steel, Miscellaneous	Lump Sum	LS	
Strip Seal Expansion Joint	116.5	Ft	
Compression Seal	116.5	Ft	
Structure Excavation, Bridge	622	CuYd	
Bridge End Backfill	318	CuYd	
Bridge End Backfill Excavation	288	CuYd	
Class A45 Concrete, Bridge Deck	642.6	CuYd	See Special Provision
Class A45 Concrete, Bridge	574.4	CuYd	
Concrete Approach Slab for Bridge	260.2	SqYd	
Concrete Approach Sleeper Slab for Bridge	93.9	SqYd	
Reinforcing Steel	114470	LB	
Epoxy Coated Reinforcing Steel	191189	LB	
No. 7 Rebar Splice	150	Each	
No. 14 Rebar Splice	10	Each	
HP 12 Pile tip reinforcement	64	Each	
HP 12x53 Steel Test Pile, Furnish and Drive	131	Ft	
HP 12x53 Steel Pile, Furnish and Drive	726	Ft	
HP 12x74 Steel Test Pile, Furnish and Drive	62	Ft	
HP 12x74 Steel Pile, Furnish and Drive	1248	Ft	
Bridge Berm Slope Protection, Crushed Aggregate	521	SqYd	
Concrete Penetrating Sealer	2320.9	SqYd	See Special Provision

REQUIRED LIST

1. Title Block
2. Project Block
3. Estimate of Quantities
4. Notes

4

SPECIFICATIONS FOR BRIDGE

1. Design Specifications: AASHTO Standard Specifications for Highway Bridges, 2002 Edition using Load Factor Design Method, except Working Stress Method was used for piling, footing, and deck slab design.

2. Construction Specifications: South Dakota Standard Specifications for Roads and Bridges, 2004 Edition and required provisions, supplemental specifications and/or special provisions as included in the proposal.

BRIDGE DESIGN LOADING

1. AASHTO HS25-44 & Alternate, except HS20-44 & Alt. loading was used for the design of the bridge deck and serviceability requirements.

2. Dead Load includes 22 psf for future wearing surface on the roadway.

DESIGN MIX OF CONCRETE

1. All structural concrete shall be Class A45 unless otherwise indicated.

2. Type II cement conforming to Section 750 is required except, Type III cement is required in the abutments. Type III cement shall contain a maximum 8% Tricalcium Aluminate (C_3A) and a maximum 0.6% Alkalies (Na_2O + O.658K_2O).

3. Coarse aggregate to be used in concrete shall consist of either crushed quartzite or other crushed ledge rock. If crushed ledge rock other than quartzite is to be used, it shall be from a source approved by the Engineer.

4. Grout design mix shall be as specified in the South Dakota Standard Specifications Section 460.3.S. A compressive strength of 2000 psi shall be attained by the grout prior to erection of any beams. Chamfer edges of grout pads ¾". The quantity of grout is included in and shall be paid for at the contract unit price per cubic yard for Class A45 Concrete, Bridge.

2

UNIT DESIGN STRESSES

1. Design Material Strengths:

Class A45 Concrete	f'c = 4,500 p.s.i.
Reinforcing Steel (ASTM A615 Gr. 60)	fy = 60,000 p.s.i.
Structural Steel (ASTM A709 Gr. 50W T2)	fy = 50,000 p.s.i.

2. Design unit stresses shall be as set forth in the Design Specification (see note regarding Specifications for Bridge) with the exception that f'c = 1450 p.s.i. for the design of the bridge deck slab (Service Load Design).

GENERAL CONSTRUCTION

1. All mild reinforcing steel shall be deformed bars conforming to ASTM A615, Grade 60.

2. All exposed concrete corners and edges shall be chamfered 3/4" unless noted otherwise.

3. Use 2" clear cover on all reinforcing steel except as shown.

4. Contractor shall imprint on the structure the date of new construction as specified and detailed on Standard Plate No. 460.02.

5. Barrier Curbs and End blocks shall be built normal to the grade.

6. Request for construction joints or resteel splices at points other than those shown, must be submitted to the Engineer for prior approval. If additional splices are approved, no payment will be allowed for the added quantity of resteel.

7. The elevation of the bridge deck is 17" above subgrade elevation.

8. See sequence of operations and time limitations elsewhere in plans.

1

ESTIMATE OF STRUCTURE QUANTITIES AND NOTES
FOR
(NORTHBOUND LANES)
374' - 0" CONT. COMP. STEEL GIRDER BRIDGE
Str. No. 50-176-210
DECEMBER 2003

DESIGNED BY	DRAWN BY:	CHECKED BY:	APPROVED:
DC/HE	HE	DC/HE	
STEEL	STEEL		BRIDGE ENGINEER

STATE OF	PROJECT	SHEET NO.	TOTAL SHEETS
S.D.	Reference		

REQUIRED LIST

1. Title Block
2. Project Block
3. Plan View (Piling Layout)
4. Subsurface Profile
5. North Arrow

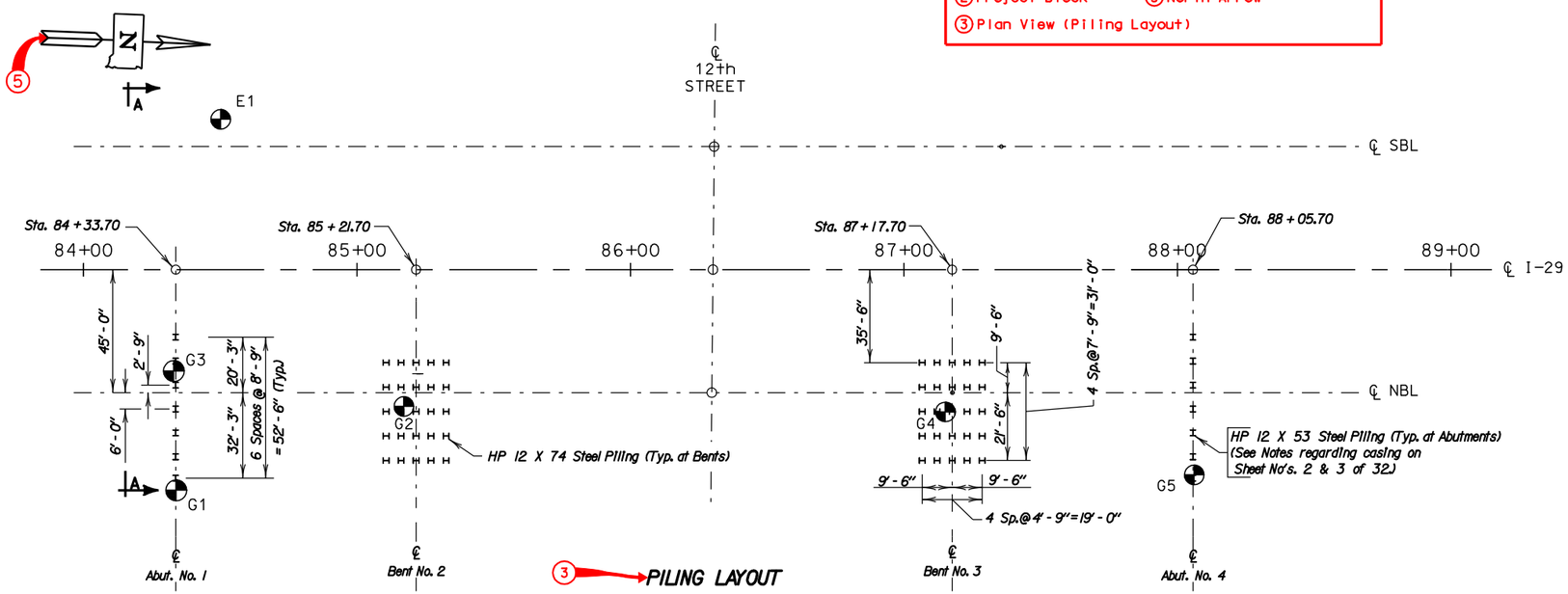

3 PILING LAYOUT

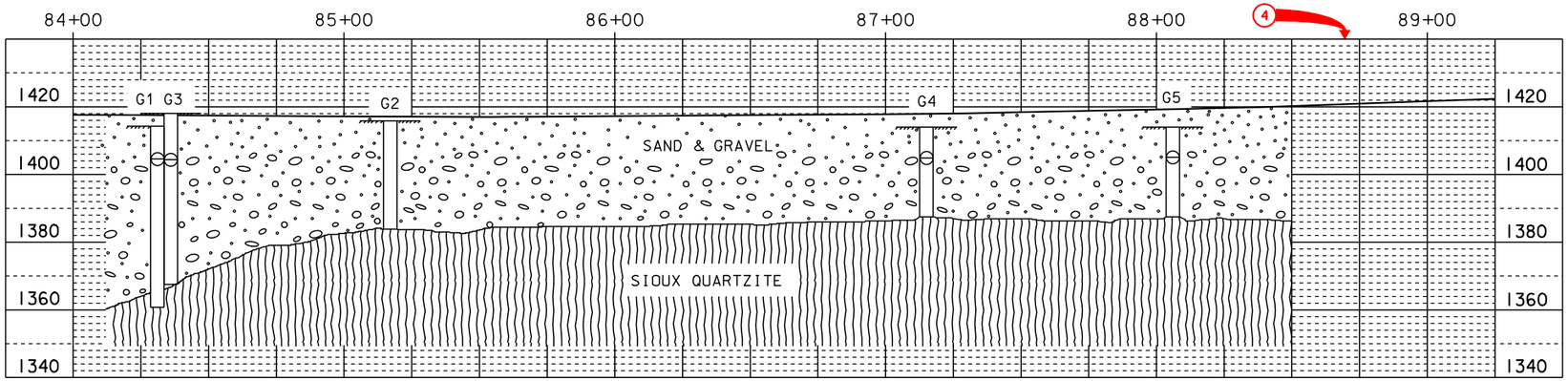

4

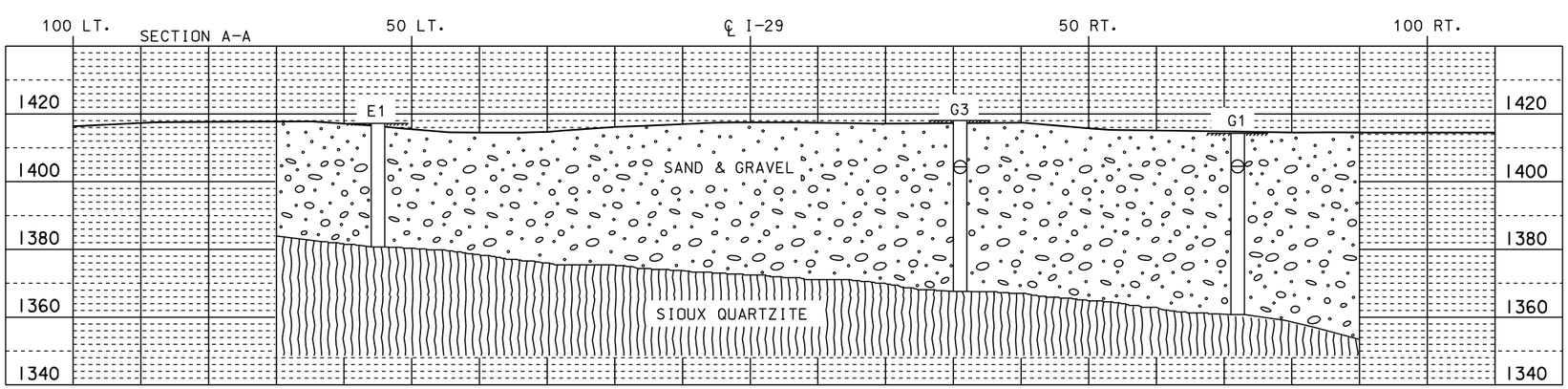

SIOUX QUARTZITE IS A PINK TO RED, HARD SLICA CEMENTED SANDSTONE. IT IS JOINTED, BEDDED, AND CROSS-BEDDED WITH THIN RED TO PURPLE PIPESTONE SHALES AND COARSE CONGLOMERATE. LAYERS OF POORLY CEMENTED SANDS MAY ALSO BE PRESENT. THE SURFACE OF THE QUARTZITE IS NOT FLAT. IT MAY VARY SEVERAL FEET VERTICALLY IN A SHORT HORIZONTAL DISTANCE.

THE GEOTECHNICAL ENGINEERING ACTIVITY HAS ON FILE ALL OF THE BORING LOGS FOR THIS PROJECT. THESE LOGS AND ADDITIONAL RESULTS OF LABORATORY TESTS, IF ANY, ARE AVAILABLE FOR REVIEW AT THE CENTRAL OFFICE IN PIERRE.

LEGEND

- AUGER TEST
- DRIVE TEST
- WATER
- CAVED
- SAMPLE ZONE

GROUND WATER ELEVATIONS AS OF JULY 2003

G1	(CAVED) 1404.6
G2	NO DATA
G3	(CAVED) 1404.4
G4	(CAVED) 1405.0
G5	(CAVED) 1405.1
E1	(CAVED) 1405.3

1 **SUBSURFACE INVESTIGATION & PILING LAYOUT**
FOR
(NORTHBOUND LANES)

374'-0" CONT. COMP. GIRDER BRIDGE

56'-0" ROADWAY — **SEC. 13/24-T101N-R50W**
OVER 12th STREET — **0° SKEW**
STR. NO. 50-176-210 — **IM 29-3(76) 78**
STA. 84+32.70 TO STA. 88+06.70 — **HS25-44**
(& ALT.)

MINNEHAHA COUNTY
S. D. DEPT. OF TRANSPORTATION
DECEMBER 2003 (8) **OF** (30)

DESIGNED BY	DRAWN BY	CHECKED BY	APPROVED
HE	BK	DC	John C. Cole
STEEL	STEEL 03		BRIDGE ENGINEER

STATE OF	PROJECT	SHEET NO.	TOTAL SHEETS
S.D.	Reference		

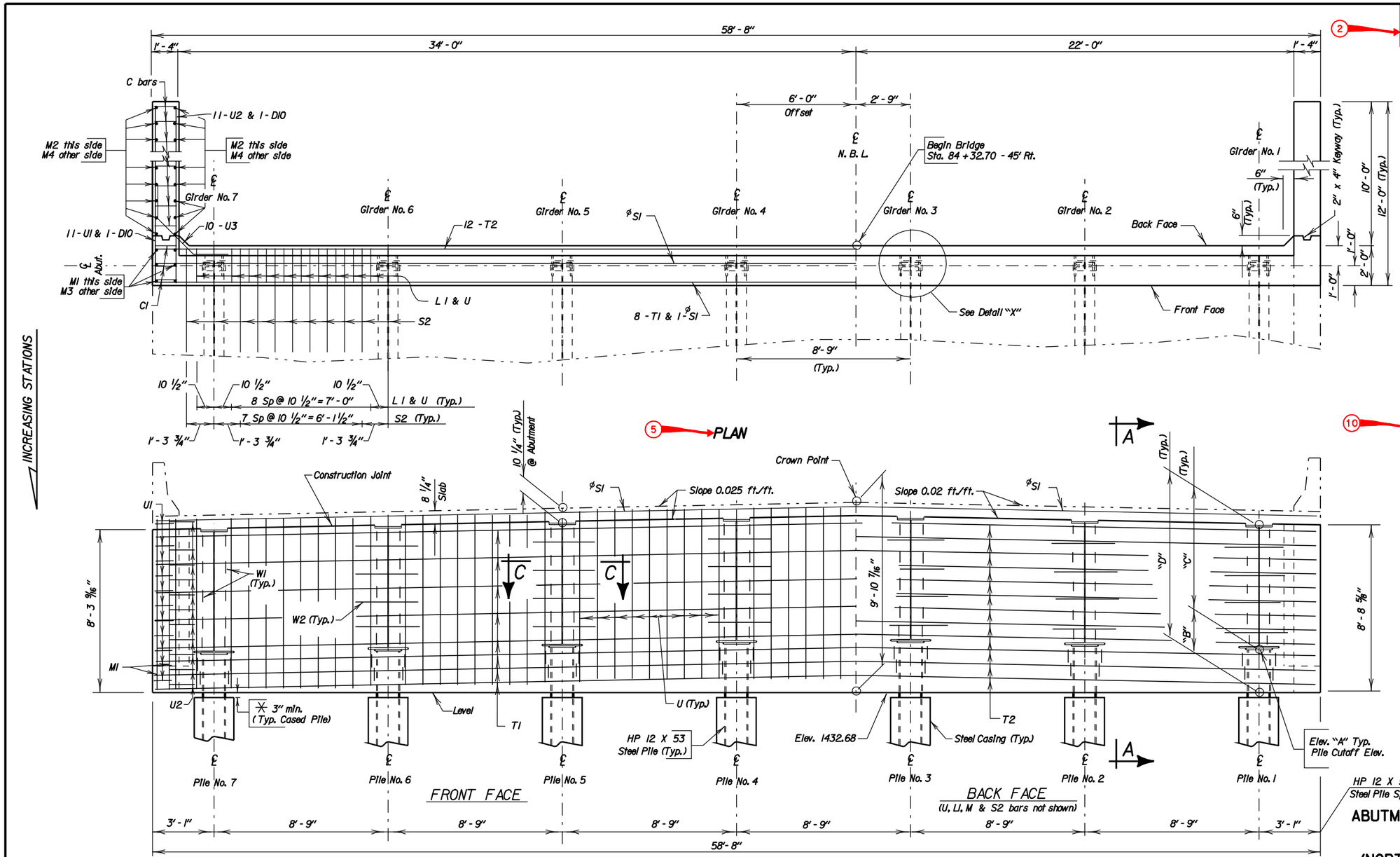

10 **NOTE-**

This sheet is to be used in conjunction with Sheet No. 11 of 30.

9 **TABLE OF ELEV. & DIMENSIONS**

Pile No.	Elev. "A"	"B"	"C"	"D"
1	1435.08	2'-4 13/16"	6'-2 1/2"	8'-7 5/16"
2	1435.26	2'-6 15/16"	6'-2 1/2"	8'-9 7/16"
3	1435.43	2'-9"	6'-2 1/2"	8'-11 1/2"
4	1435.34	2'-7 7/8"	6'-2 1/2"	8'-10 3/8"
5	1435.12	2'-5 1/4"	6'-2 1/2"	8'-7 3/4"
6	1434.90	2'-2 5/8"	6'-2 1/2"	8'-5 1/8"
7	1434.68	2'-0"	6'-2 1/2"	8'-2 1/2"

REQUIRED LIST (See Companion Sheet 11)

1 Title Block	6 Elevation View
2 Project Block	7 Sections as Required
3 Reinforcing Schedule	8 Details as Required
4 Estimated Quantities	9 Table of Elevation & Dimensions
5 Plan View	10 Notes

1

ABUTMENT NO. 1 DETAILS
FOR
(NORTHBOUND LANES)

374'-0" CONT. COMP. GIRDER BRIDGE

56'-0" ROADWAY — SEC. 13/24-T101N-R50W
OVER 12th STREET — 0° SKEW
STR. NO. 50-176-210 — IM 29-3(76) 78
STA. 84+32.70 TO STA. 88+06.70 — HS25-44
(& ALT.)

MINNEHAHA COUNTY
S. D. DEPT. OF TRANSPORTATION
DECEMBER 2003 — 9 OF 30

DESIGNED BY	DRAWN BY	CHECKED BY	APPROVED
HE	BK	DC	John C. Cole
STEEL	STEEL 04		BRIDGE ENGINEER

STATE OF	PROJECT	SHEET NO.	TOTAL SHEETS
S.D.	Reference		

2

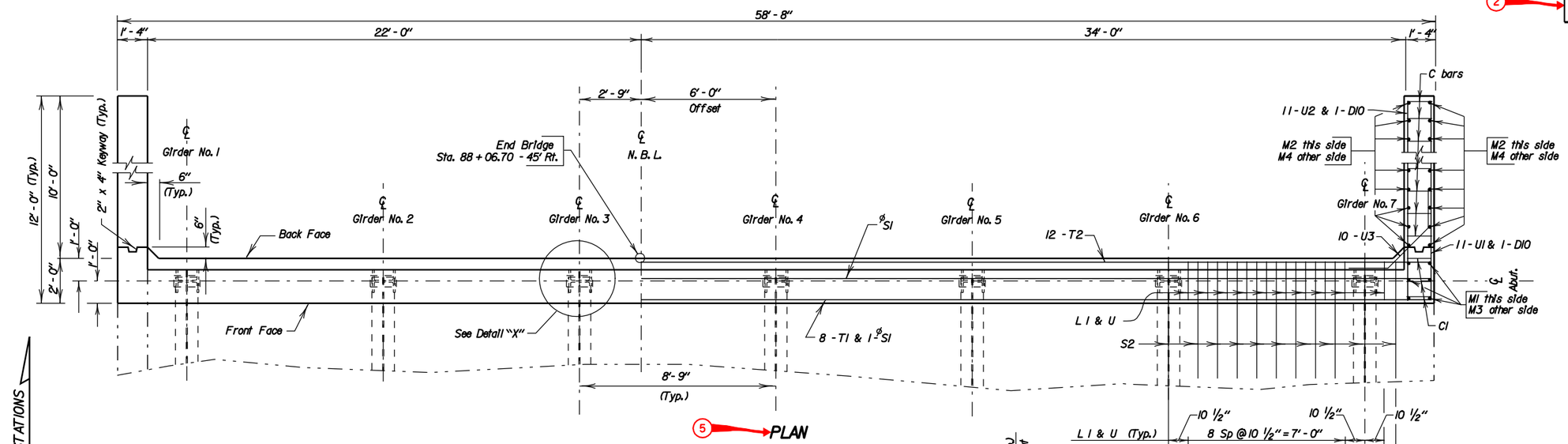

5 PLAN

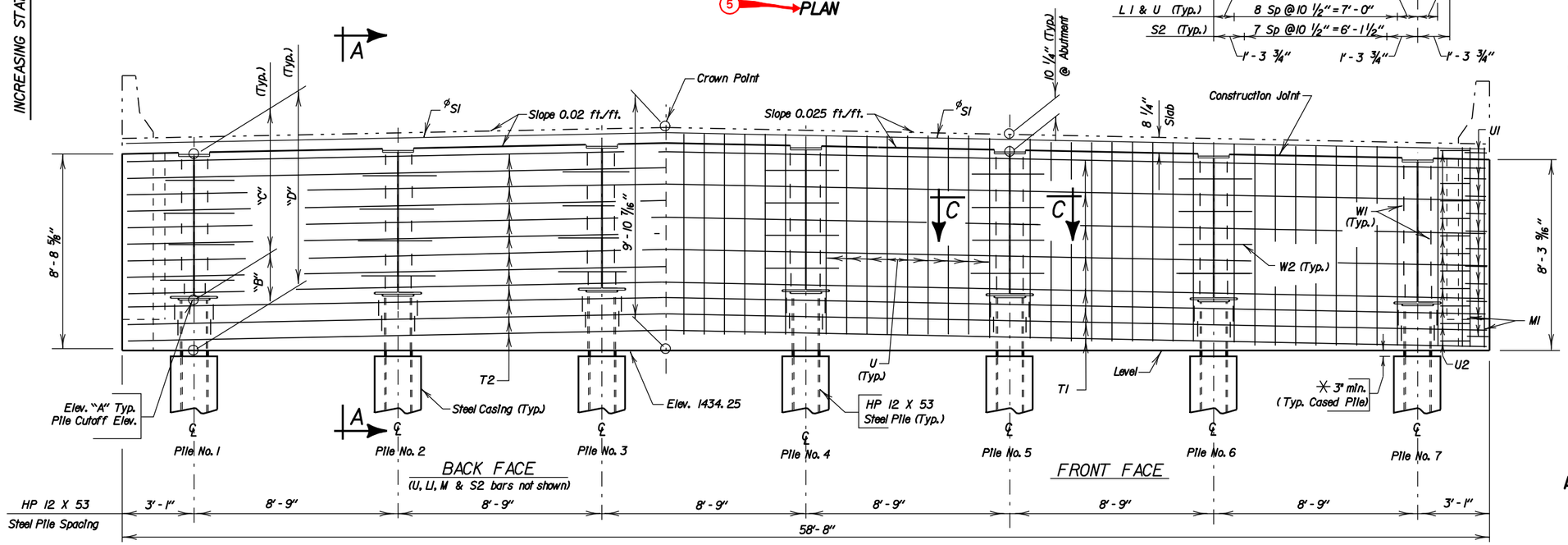

6 ELEVATION

ϕ Minimum Lap = 4'-0"
✳ See Abutment Notes

10 NOTE-
This sheet is to be used in conjunction with Sheet No. 11 of 30.

1

ABUTMENT NO. 4 DETAILS
FOR
(NORTHBOUND LANES)

374'-0" CONT. COMP. GIRDER BRIDGE

56'-0" ROADWAY — SEC. 13/24-T101N-R50W
OVER 12th STREET — 0° SKEW
STR. NO. 50-176-210 — IM 29-3(76) 78
STA. 84+32.70 TO STA. 88+06.70 — HS25-44
(& ALT.)

MINNEHAHA COUNTY
S. D. DEPT. OF TRANSPORTATION
DECEMBER 2003 (10) OF (30)

9 TABLE OF ELEV. & DIMENSIONS

Pile No.	Elev. "A"	"B"	"C"	"D"
1	1436.65	2'-4 13/16"	6'-2 1/2"	8'-7 5/16"
2	1436.83	2'-6 15/16"	6'-2 1/2"	8'-9 7/16"
3	1437.00	2'-9"	6'-2 1/2"	8'-11 1/2"
4	1436.91	2'-7 7/8"	6'-2 1/2"	8'-10 3/8"
5	1436.69	2'-5 1/4"	6'-2 1/2"	8'-7 3/4"
6	1436.47	2'-2 5/8"	6'-2 1/2"	8'-5 1/8"
7	1436.25	2'-0"	6'-2 1/2"	8'-2 1/2"

REQUIRED LIST (See Companion Sheet 11)

1 Title Block	6 Elevation View
2 Project Block	7 Sections as Required
3 Reinforcing Schedule	8 Details as Required
4 Estimated Quantities	9 Table of Elevation & Dimensions
5 Plan View	10 Notes

DESIGNED BY	DRAWN BY	CHECKED BY	APPROVED
HE	BK	DC	John C. Cole
STEEL	STEEL 05		BRIDGE ENGINEER

STATE OF	PROJECT	SHEET NO.	TOTAL SHEETS
S.D.	Reference		

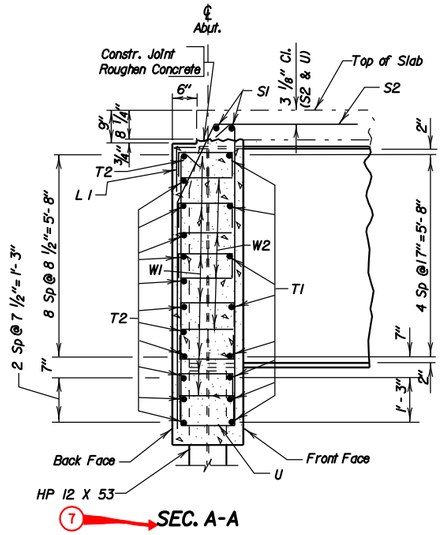

7 SEC. A-A

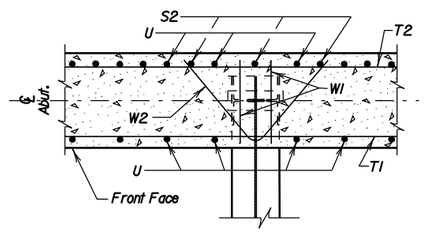

7 SEC. C-C

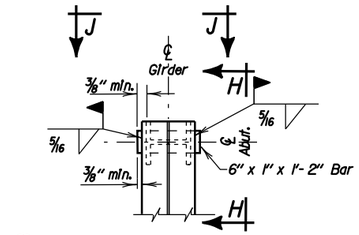

8 DETAIL "X"

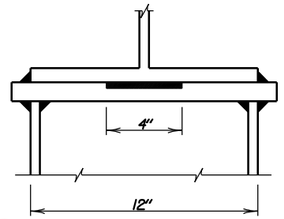

8 VIEW J - J
(showing weld locations)

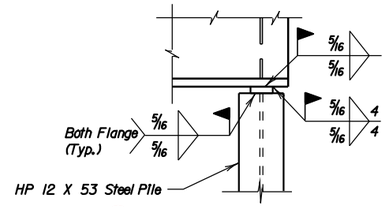

8 VIEW H - H

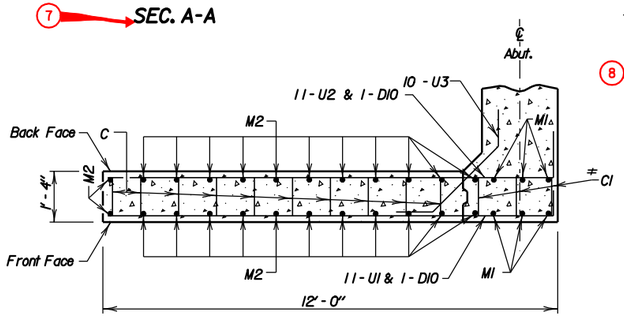

7 SEC. D-D

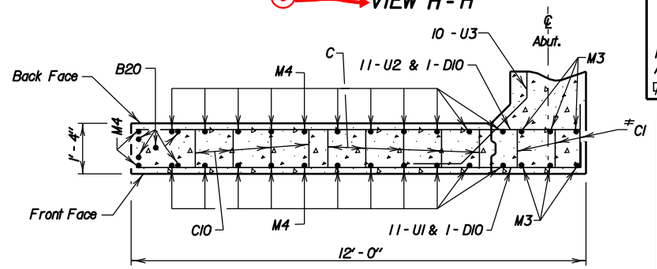

7 SEC. E-E

10 NOTE-
This sheet is to be used in conjunction with Sheet No's. 9 & 10 of 30.

3

REINFORCING SCHEDULE
(For One Abutment)

Mk.	No.	Size	Length	Type
B20	5	6	3'-6"	Str.
C	15	5	5'-10"	T2A
C10	4	6	6'-0"	T1A
D10	4	4	11'-6"	Str.
L1	56	4	3'-4"	17A
M1	6	6	8'-8"	Str.
M2	24	6	7'-7"	Str.
M3	6	6	9'-1"	Str.
M4	24	6	8'-0"	Str.
S1	4	9	31'-3"	Str.
S2	57	6	8'-0"	14A
T1	8	6	58'-4"	Str.
T2	12	8	58'-4"	Str.
U	56	6	19'-3"	S3
U1	22	4	12'-4"	17A
U2	22	7	12'-10"	17A
U3	20	6	4'-2"	19
W1	98	6	3'-0"	17
W2	28	8	5'-0"	13A

Bending Details

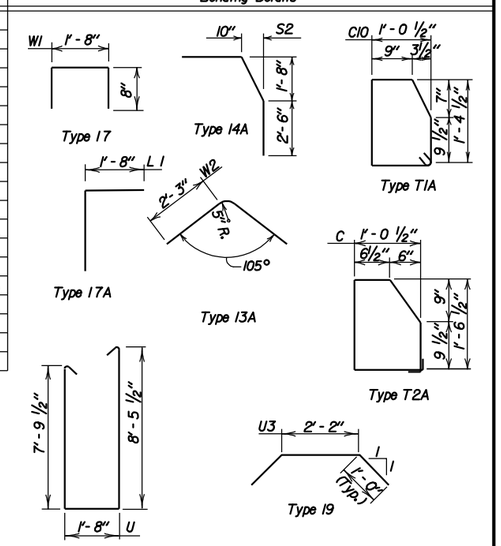

NOTE:
All dimensions are out to out of bars.
Bars to be Epoxy Coated.

ESTIMATED QUANTITIES

ITEM	UNIT	QUANTITY ABUTMENT NO. 1	QUANTITY ABUTMENT NO. 4
Class A45 Concrete, Bridge	Cu. Yd.	46.5	46.5
Reinforcing Steel	Lb.	3635	3635
Epoxy Coated Reinforcing Steel	Lb.	4393	4393
Structure Excavation, Bridge	Cu. Yd.	11.4	11.4
HP 12 X 53 Steel Test Pile, Furnish & Drive	Ft.	1@76'=76'	1@55'=55'
HP 12 X 53 Steel Bearing Pile, Furnish & Drive	Ft.	6@71'=426'	6@50'=300'
HP 12 Pile Tip Reinforcement	Each	7	7

4

REQUIRED LIST (See Companion Sheets 9 & 10)

1 Title Block	6 Elevation View
2 Project Block	7 Sections as Required
3 Reinforcing Schedule	8 Details as Required
4 Estimated Quantities	9 Table of Elevation & Dimensions
5 Plan View	10 Notes

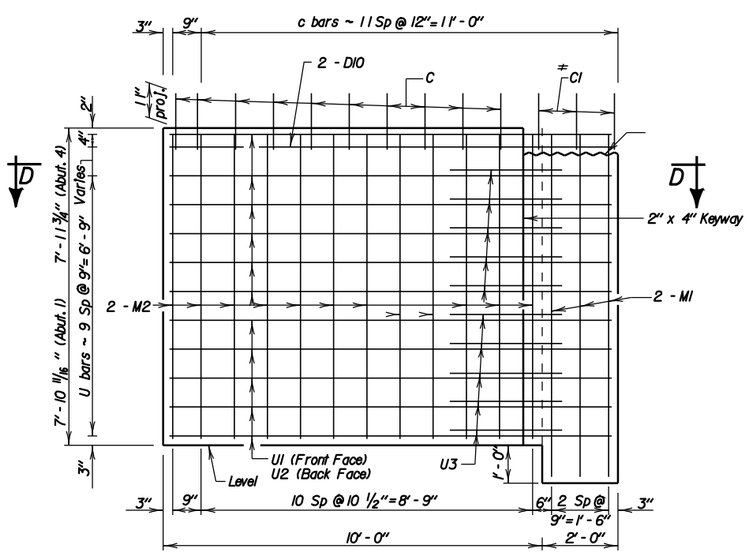

8 WING ELEVATION
(Wing without Endblock)

#C1 bars are included in superstructure quantities.

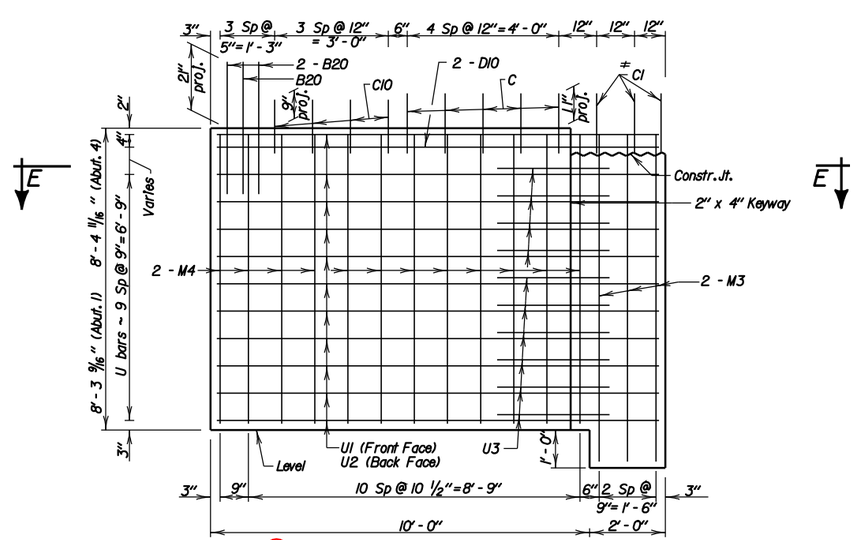

8 WING ELEVATION
(Wing with Endblock)

1 ABUTMENT DETAILS (CONTINUED)
FOR
(NORTHBOUND LANES)

374'-0" CONT. COMP. GIRDER BRIDGE

56'-0" ROADWAY — SEC. 13/24-T101N-R50W
OVER 12th STREET — 0° SKEW
STR. NO. 50-176-210 — IM 29-3(76) 78
STA. 84+32.70 TO STA. 88+06.70 — HS25-44 (& ALT.)

MINNEHAHA COUNTY
S. D. DEPT. OF TRANSPORTATION
DECEMBER 2003 — 11 OF 30

DESIGNED BY	DRAWN BY	CHECKED BY	APPROVED
HE	BK	DC	John C. Cole
STEEL	STEEL 06		BRIDGE ENGINEER

STATE OF	PROJECT	SHEET NO.	TOTAL SHEETS
S.D.	Reference		

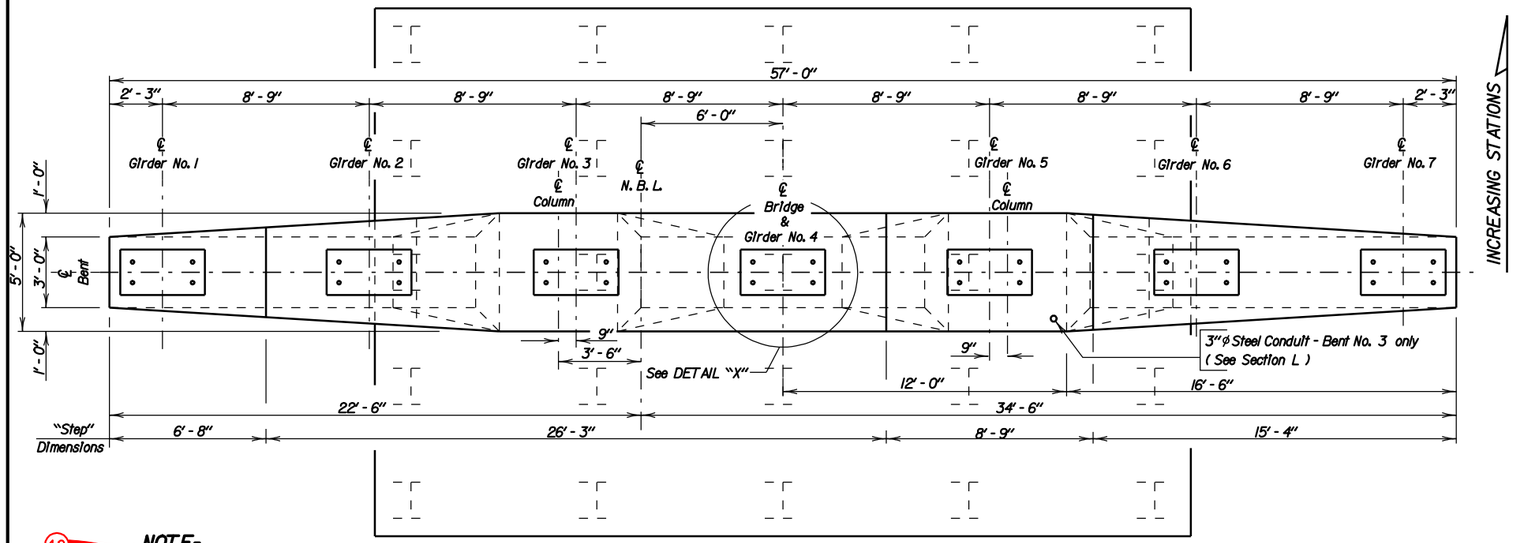

10 **NOTE-**
This sheet is to be used in conjunction with Sheet No's. 13 & 14 of 30.

6 **PLAN**

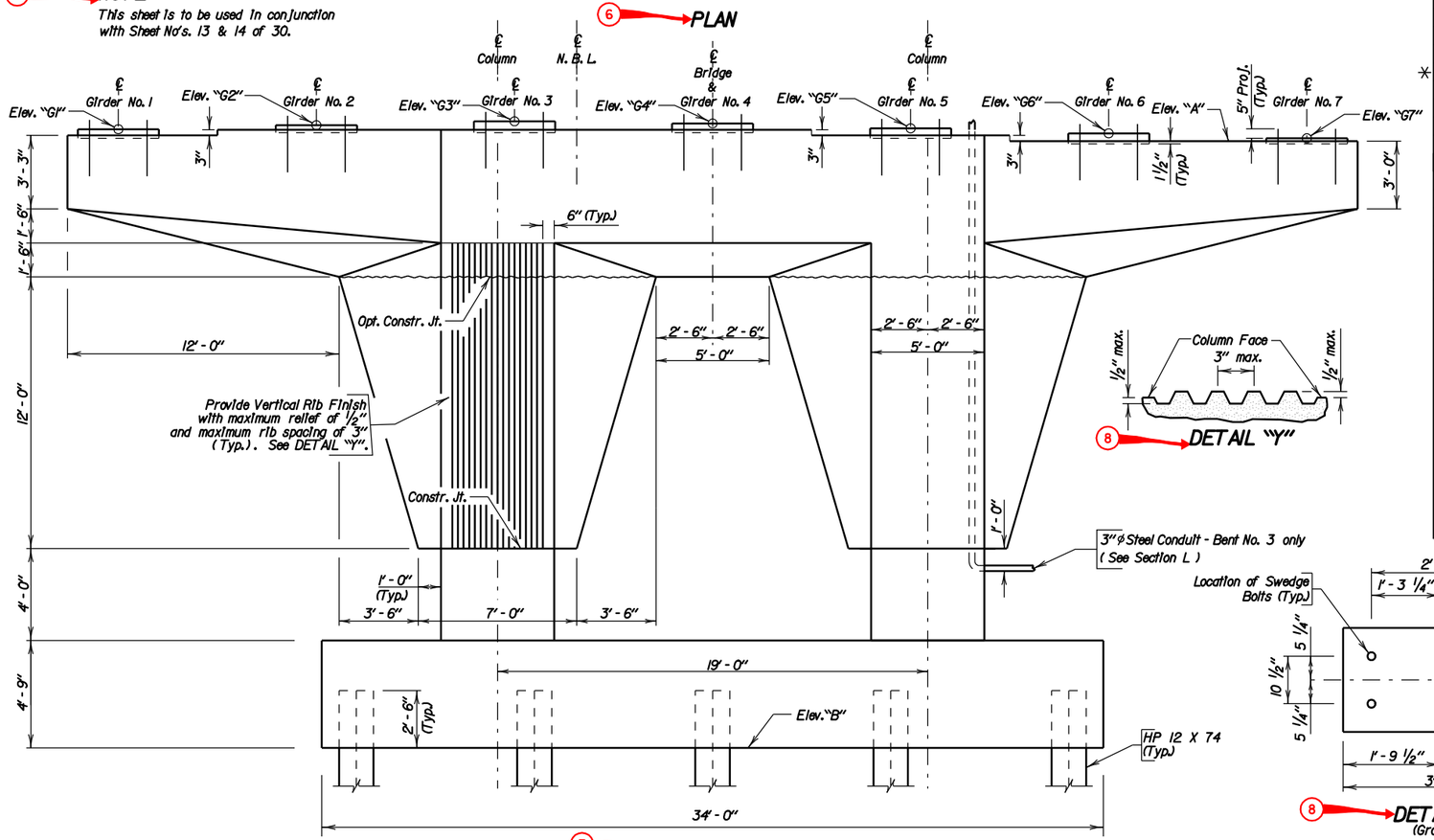

7 **ELEVATION**

8 **DETAIL "Y"**

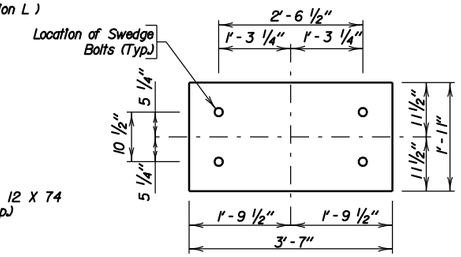

8 **DETAIL "X"**
(Grout Pad)

3

REINFORCING SCHEDULE
(For One Bent)

Mk.	No.	Size	Length	Type
F1	10	14	30'-7"	1A
F2	2	14	42'-6"	1
F3	10	14	19'-3"	1A
F4	4	14	14'-3"	1A
F5	4	5	6'-6"	17
F6	12	6	15'-3"	Str.
F7	4	6	12'-9"	Str.
F8	4	6	7'-4"	Str.
F9	10	6	28'-0"	19A
F10	10	6	16'-10"	Str.
F11	6	9	13'-8"	Str.
* F12	56	4	13'-1"	14
F13	2	4	7'-0"	Str.
G1	2	5	11'-8"	T2
* G2	42	5	11'-2"	T2
* G3	18	5	13'-6"	T2
* G4	48	5	15'-4"	T2
* G5	6	5	19'-4"	T2
G6	24	5	7'-9"	17
G7	8	5	8'-7"	17
G8	20	5	10'-3"	14A
G9	6	5	21'-8"	T2
G10	15	5	16'-2"	T2
G11	30	5	11'-11"	14A
G12	56	5	5'-1"	17A
G13	13	5	8'-8"	17
* G14	8	5	7'-7"	17
H1	52	8	14'-0"	Str.
H2	64	18	28'-11"	17A
J1	72	4	16'-2"	T2
J2	36	4	12'-10"	T2
K1	60	11	21'-6"	Str.
K2	38	10	33'-6"	Str.
K3	41	7	21'-6"	Str.
K4	22	5	33'-6"	Str.
P1	6	6	8'-9"	Str.
P2	2	6	25'-11"	19A
P3	4	6	25'-11"	Str.
P4	4	6	6'-8"	Str.

Bending Details

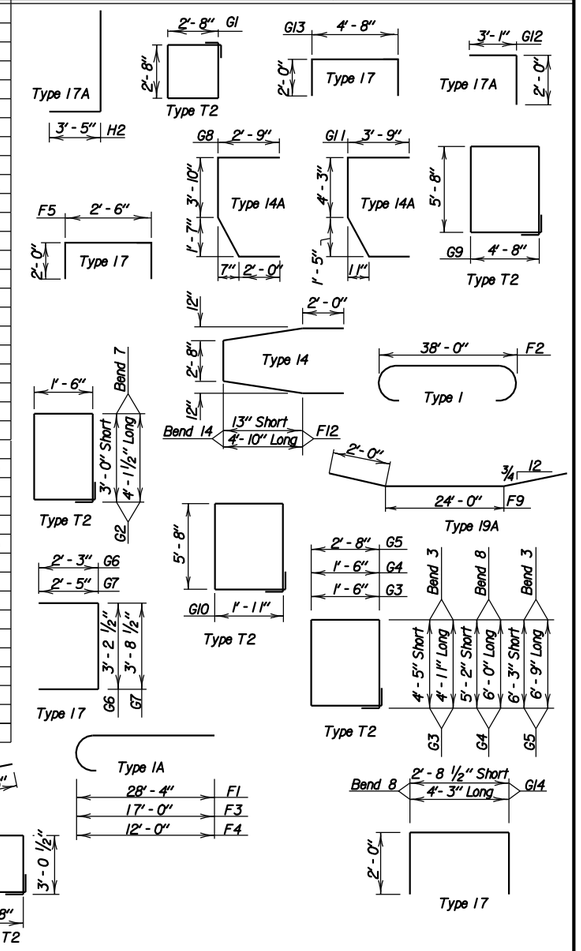

NOTES-
All dimensions are out to out of bars.
* Length shown is average, actual lengths vary according to bend diagram.

1 **BENT NO. 2 AND NO. 3 DETAILS**
FOR
(NORTHBOUND LANES)

374'-0" CONT. COMP. GIRDER BRIDGE

56'-0" ROADWAY — SEC. 13/24-T101N-R50W
OVER 12th STREET — 0° SKEW
STR. NO. 50-176-210 — IM 29-3(76) 78
STA. 84+32.70 TO STA. 88+06.70 — HS25-44 (& ALT.)

MINNEHAHA COUNTY
S. D. DEPT. OF TRANSPORTATION
DECEMBER 2003 — 12 OF 30

5 **TABLE OF ELEVATIONS**

Bent No.	Elev. "A"	Elev. "B"	Elev. "G1"	Elev. "G2"	Elev. "G3"	Elev. "G4"	Elev. "G5"	Elev. "G6"	Elev. "G7"
2	1435.06	1408.31	1435.58	1435.75	1435.93	1435.83	1435.61	1435.40	1435.18
3	1435.88	1409.13	1436.40	1436.57	1436.75	1436.65	1436.43	1436.22	1436.00

NOTE- Elev. "G1". thru G7" are top of grout pad elevations at ℄ Bent.
Top of grout pad shall be level and smooth.

REQUIRED LIST (See Companion Sheets 13 & 14)

1 Title Block	4 Estimate of Quantities	7 Elevation View	10 Notes
2 Project Block	5 Table of Elevations	8 Details as Required	
3 Reinforcing Schedule	6 Plan View	9 Sections as Required	

DESIGNED BY	DRAWN BY	CHECKED BY	APPROVED
HE	BK	DC	John C. Cole
STEEL	STEEL 07		BRIDGE ENGINEER

STATE OF	PROJECT	SHEET NO.	TOTAL SHEETS
S.D.	Reference		

REQUIRED LIST (See Companion Sheets 12 & 14)

1. Title Block
2. Project Block
3. Reinforcing Schedule
4. Estimate of Quantities
5. Table of Elevations
6. Plan View
7. Elevation View
8. Details as Required
9. Sections as Required
10. Notes

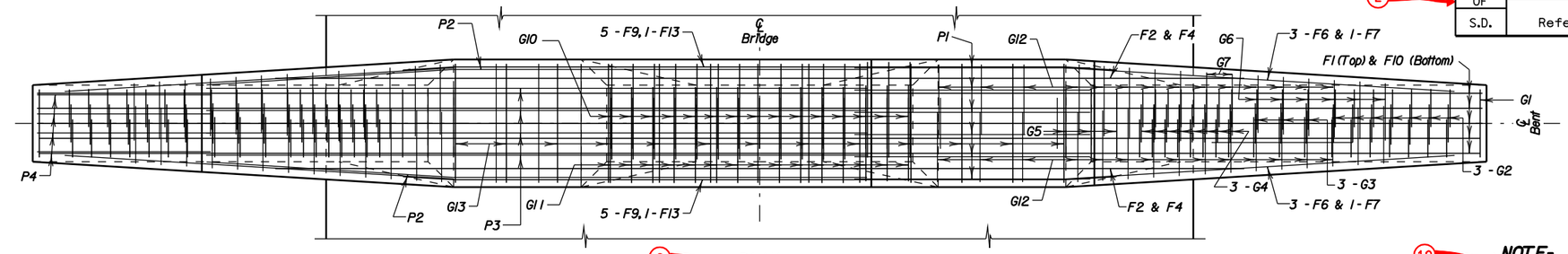

6 PLAN

10 NOTE-
This sheet is to be used in conjunction with Sheet No's. 12 & 14 of 30.

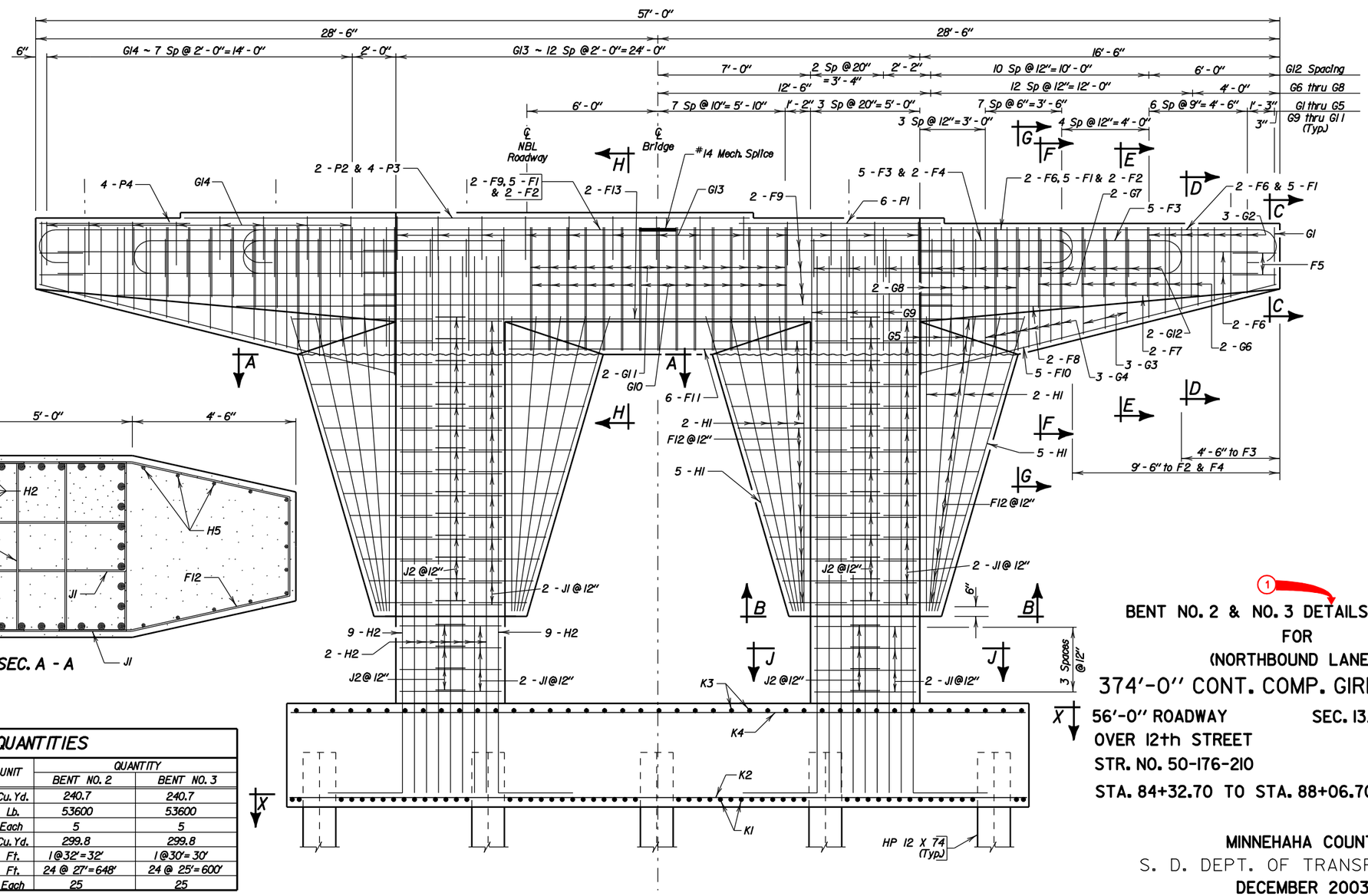

7 ELEVATION

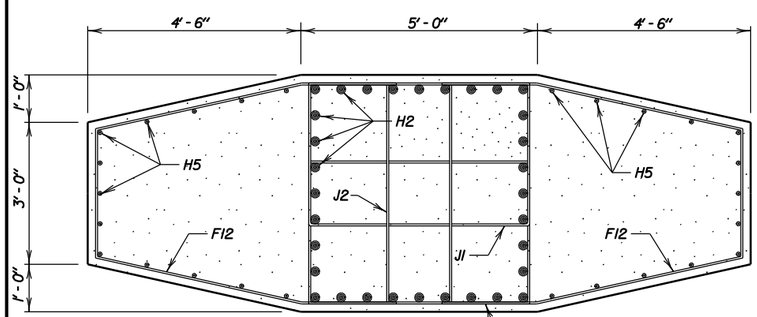

9 SEC. A - A

4

ESTIMATED QUANTITIES

ITEM	UNIT	QUANTITY BENT NO. 2	QUANTITY BENT NO. 3
∡ Class A45 Concrete, Bridge	Cu. Yd.	240.7	240.7
Reinforcing Steel	Lb.	53600	53600
No. 14 Rebar Splice	Each	5	5
Structure Excavation, Bridge	Cu. Yd.	299.8	299.8
HP 12 X 74 Steel Test Pile, Furnish & Drive	Ft.	1 @ 32' = 32'	1 @ 30' = 30'
HP 12 X 74 Steel Bearing Pile, Furnish & Drive	Ft.	24 @ 27' = 648'	24 @ 25' = 600'
HP 12 Pile Tip Reinforcement	Each	25	25

∡ Includes 0.7 Cu. Yds. for Grout Pads at each Bent.

1

BENT NO. 2 & NO. 3 DETAILS (CONTINUED)
FOR
(NORTHBOUND LANES)

374'-0" CONT. COMP. GIRDER BRIDGE

56'-0" ROADWAY — SEC. 13/24-T101N-R50W
OVER 12th STREET — 0° SKEW
STR. NO. 50-176-210 — IM 29-3(76) 78
STA. 84+32.70 TO STA. 88+06.70 — HS25-44 (& ALT.)

MINNEHAHA COUNTY
S. D. DEPT. OF TRANSPORTATION
DECEMBER 2003 — 13 OF 30

DESIGNED BY	DRAWN BY	CHECKED BY	APPROVED
HE	BK	DC	John C. Cole
STEEL	STEEL 08		BRIDGE ENGINEER

STATE OF	PROJECT	SHEET NO.	TOTAL SHEETS
S.D.	Reference		

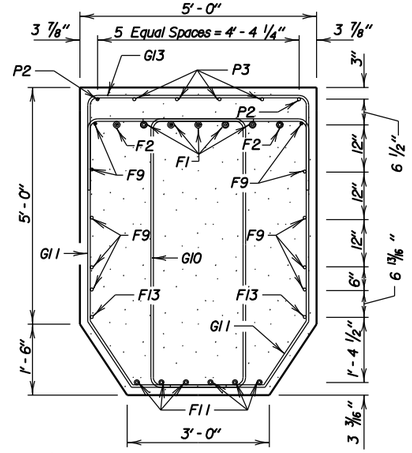

9 SEC. H - H

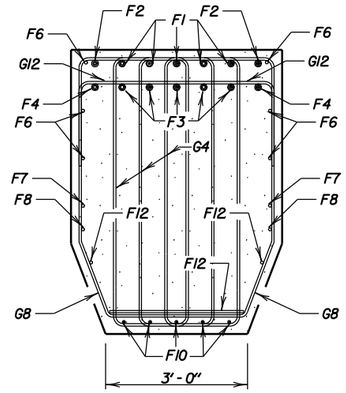

9 SEC. G - G

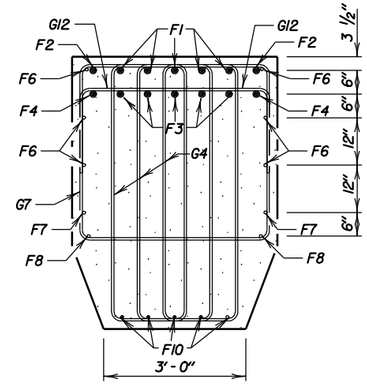

9 SEC. F - F

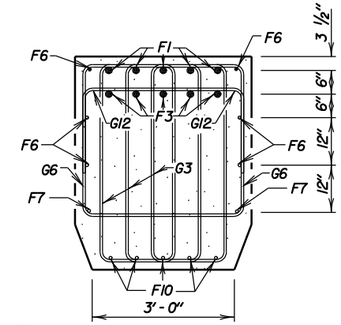

9 SEC. E - E

10 **NOTE-**

This sheet is to be used in conjunction with Sheet No's. 12 & 13 of 30.

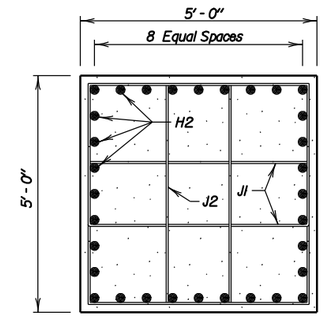

9 SEC. J - J

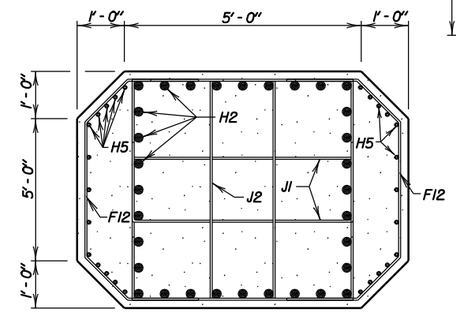

9 SEC. B - B

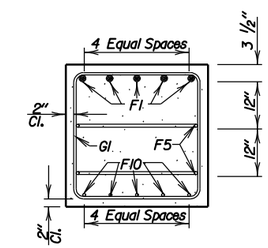

9 SEC. C - C

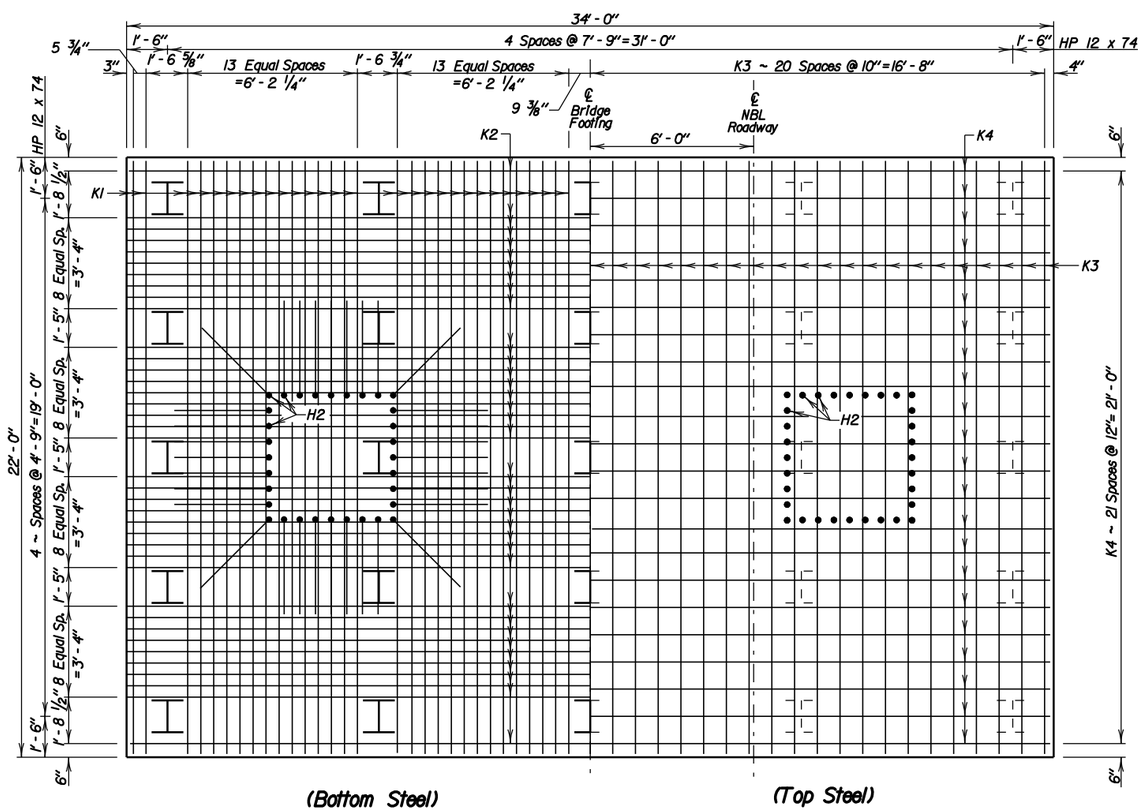

9 SEC. X - X

REQUIRED LIST (See Companion Sheets 12 & 13)			
1 Title Block	4 Estimate of Quantities	7 Elevation View	10 Notes
2 Project Block	5 Table of Elevations	8 Details as Required	
3 Reinforcing Schedule	6 Plan View	9 Sections as Required	

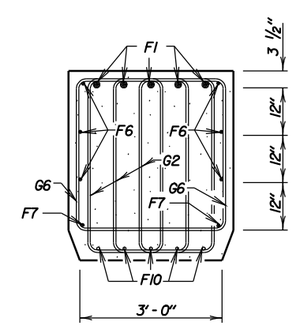

9 SEC. D - D

1

BENT NO. 2 & NO. 3 DETAILS (CONTINUED)
FOR
(NORTHBOUND LANES)

374'-0" CONT. COMP. GIRDER BRIDGE

56'-0" ROADWAY — SEC. 13/24-T101N-R50W
OVER 12th STREET — 0° SKEW
STR. NO. 50-176-210 — IM 29-3(76) 78
STA. 84+32.70 TO STA. 88+06.70 — HS25-44 (& ALT.)

MINNEHAHA COUNTY
S. D. DEPT. OF TRANSPORTATION
DECEMBER 2003 — 14 OF 30

DESIGNED BY	DRAWN BY	CHECKED BY	APPROVED
HE	BK	DC	John C. Cole
STEEL	STEEL 09		BRIDGE ENGINEER

STATE OF	PROJECT	SHEET NO.	TOTAL SHEETS
S.D.	Reference		

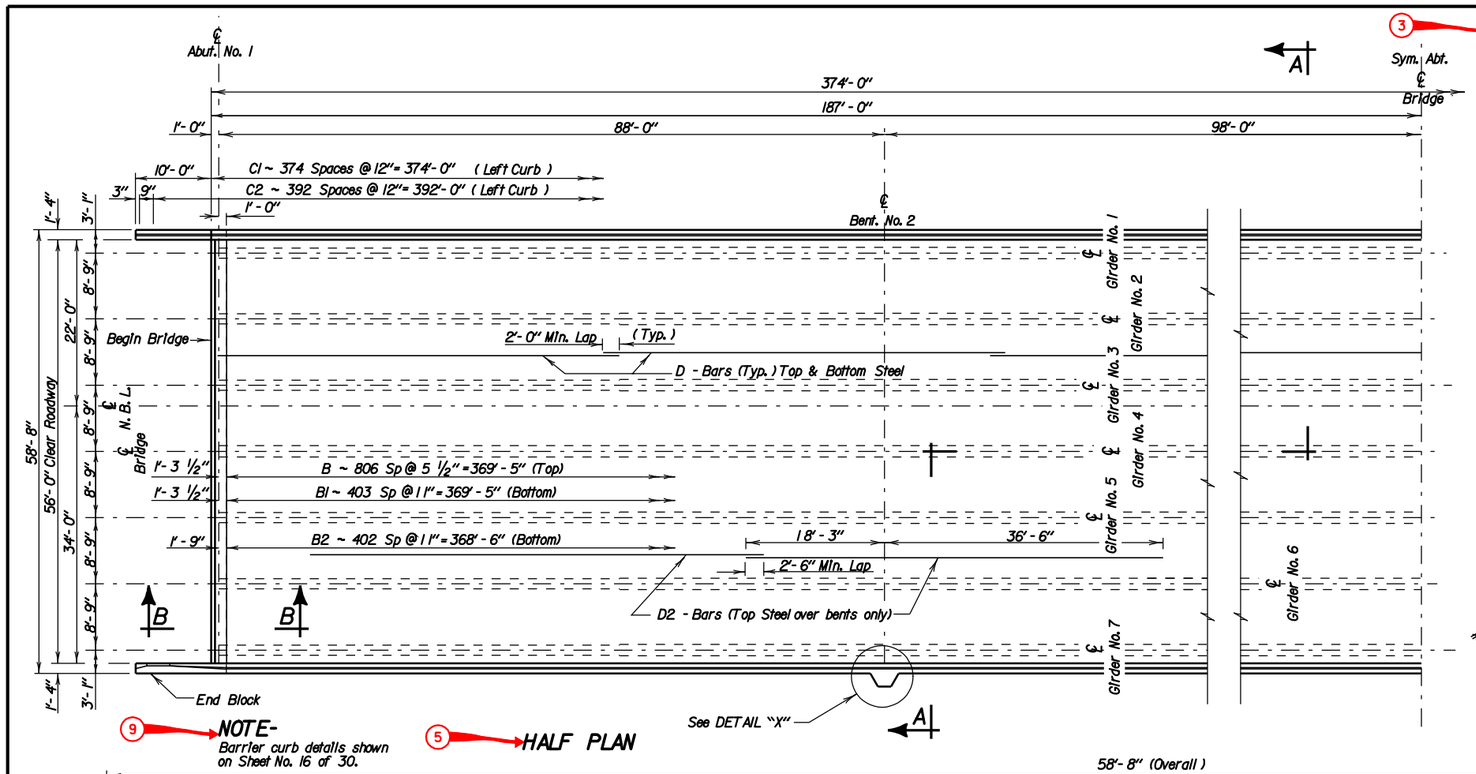

9 NOTE-
Barrier curb details shown on Sheet No. 16 of 30.

5 HALF PLAN

3

REINFORCING SCHEDULE

Mk.	No.	Size	Length	Type
B	807	5	58'-4"	Str
B1	404	5	54'-6"	Str.
B2	403	4	58'-4"	Str.
B15	6	5	14'-6"	Str.
B16	7	4	57'-2"	Str.
B17	4	4	8'-6"	19B
B18	6	8	4'-3"	19B
B19	6	5	2'-4"	Str.
B21	7	4	57'-7"	Str.
C1	750	5	5'-10"	T2A
C2	766	5	5'-1"	S11
C3	2	5	5'-0"	S11
C4	2	5	5'-0"	S11
C5	2	5	5'-0"	S11
C6	2	5	6'-8"	T1
C7	2	5	6'-9"	T1
C8	2	5	6'-11"	T1
C9	2	5	7'-0"	T1
C11	8	5	7'-1"	T1
C13	2	5	5'-3"	17
D	917	5	55'-2"	Str.
D1	70	5	58'-0"	Str.
D2	224	6	54'-9"	Str.
P1	8	4	3'-0"	Str.
P2	16	4	3'-0"	1
P3	6	4	6'-9"	7
P4	6	4	7'-6"	7
P5	12	4	6'-5'	T2
P6	8	4	4'-0"	19B
Z1	150	7	2'-0"	Str.

NOTES-
All reinforcing steel shall be epoxy coated.
≈ See Sheet No. 23 of 30 for location of Z1 bars.
All dimensions are out to out of bars.

Bending Details

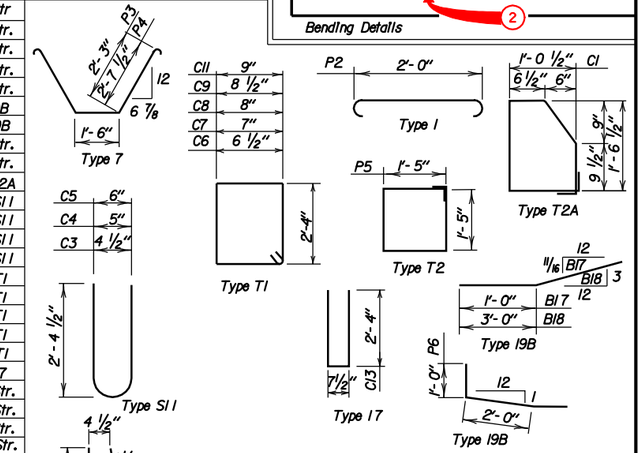

REQUIRED LIST

1. Title Block
2. Project Block
3. Reinforcing Schedule
4. Estimated Quantities
5. Plan View
6. Section A-A
7. Sections as Required
8. Details as Required
9. Notes

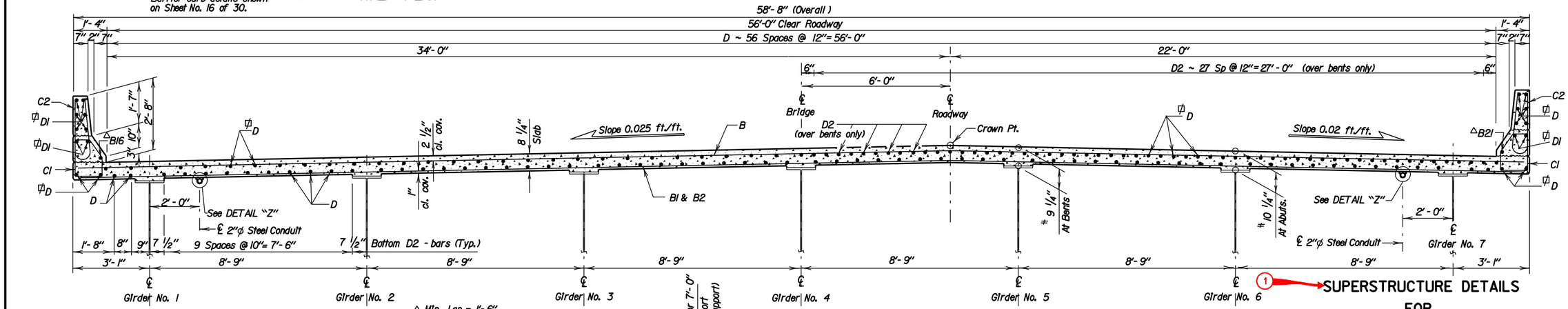

1 SUPERSTRUCTURE DETAILS

△ Min. Lap = 1'-6"
⌀ Min. Lap = 2'-0"

≈ Dimensions are at ℄ bearing; at other points along the girders this dimension shall be computed as shown on the Framing Diagram & Erection Data sheet.
✳ Z2 bars are listed and included in approach slab quantities on Sheet No. 23 of 30.

NOTE-
Space concrete inserts at 5'-0" maximum spacing

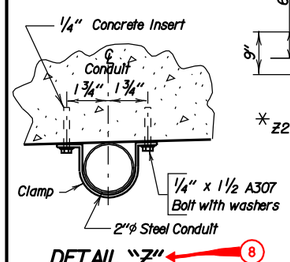

DETAIL "Z" 8

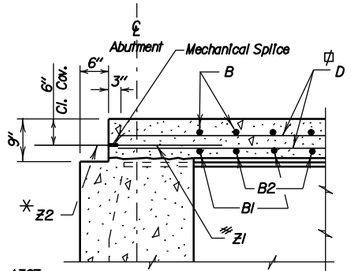

7 SEC. B - B

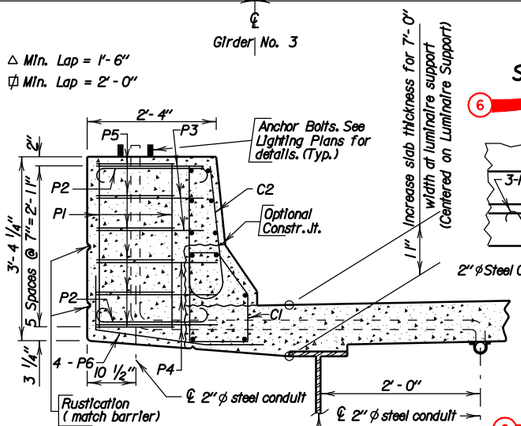

7 SEC. H-H

6 SEC. A - A

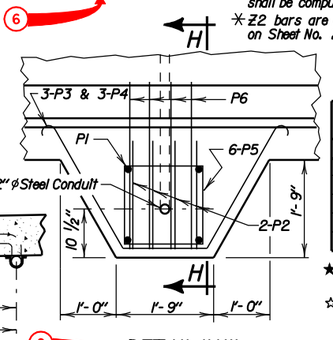

8 DETAIL "X"

4

ESTIMATED QUANTITIES

ITEM	UNIT	QUANTITY
☆ Class A45 Concrete, Bridge Deck	Cu. Yd.	642.6
★ Structural Steel, Install	Lump Sum	Lump Sum
No. 7 Rebar Splice	Each	150
Epoxy Coated Reinforcing Steel	Lb.	173493
Concrete Penetrating Sealer	Sq. Yd.	2320.9

★ For informational purposes only, the estimated weight of the structural steel is 732807 pounds.
☆ Concrete quantity for Barrier Curb is 0.0842 Cu. Yd. per foot. Each 12' End Block contains 1.1659 Cu. Yd. of concrete.

SUPERSTRUCTURE DETAILS
FOR
(NORTHBOUND LANES)

374'-0" CONT. COMP. GIRDER BRIDGE

56'-0" ROADWAY — SEC. 13/24-T101N-R50W
OVER 12th STREET — 0° SKEW
STR. NO. 50-176-210 — IM 29-3(76) 78
STA. 84+32.70 TO STA. 88+06.70 — HS25-44
(& ALT.)

MINNEHAHA COUNTY
S. D. DEPT. OF TRANSPORTATION
DECEMBER 2003 — 15 OF 30

DESIGNED BY	DRAWN BY	CHECKED BY	APPROVED
HE	BK	DC	John C. Cole
STEEL	STEEL 10		BRIDGE ENGINEER

STATE OF	PROJECT	SHEET NO.	TOTAL SHEETS
S.D.	Reference		

2

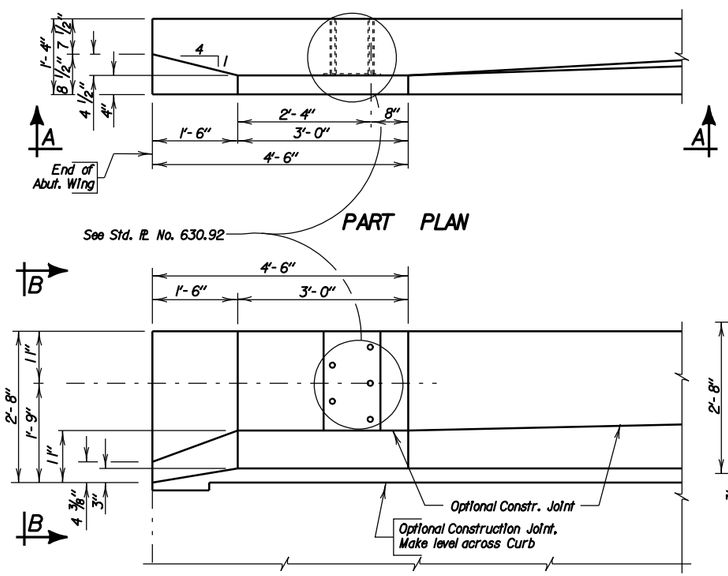

PART PLAN

VIEW A - A

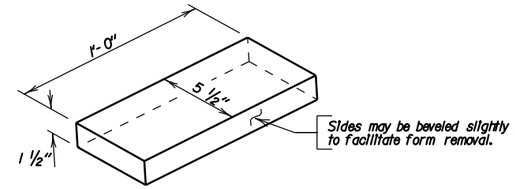

RECESS DETAIL

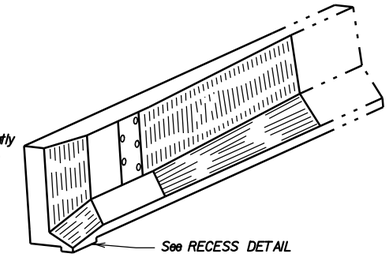

ISOMETRIC VIEW

REQUIRED LIST

1. Title Block
2. Project Block
3. Fill out Remainder of Standard Base Sheet

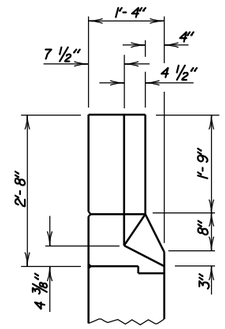

VIEW B - B

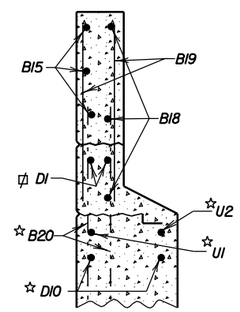

SEC. C-C

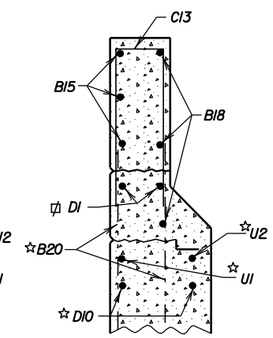

SEC. D-D

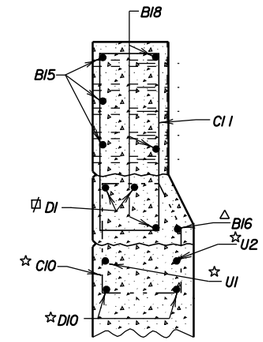

SEC. E-E

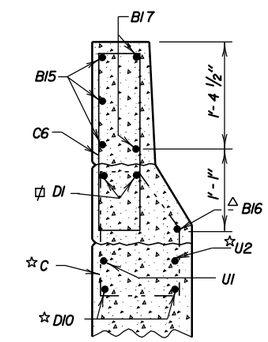

SEC. F-F

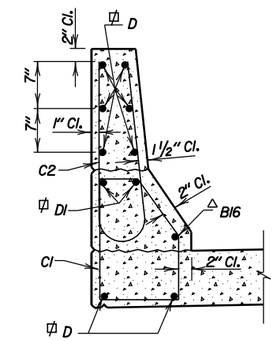

SEC. G-G

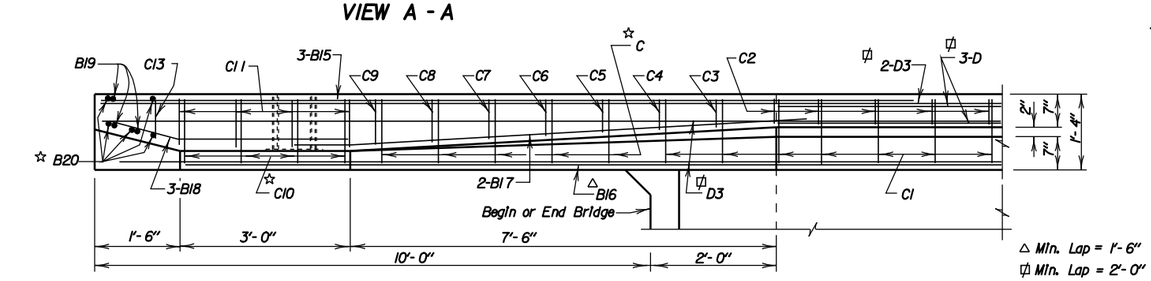

PLAN

☆Included In Abutment quantities. See Sheet Nos. 9, 10 & 11 of 30.

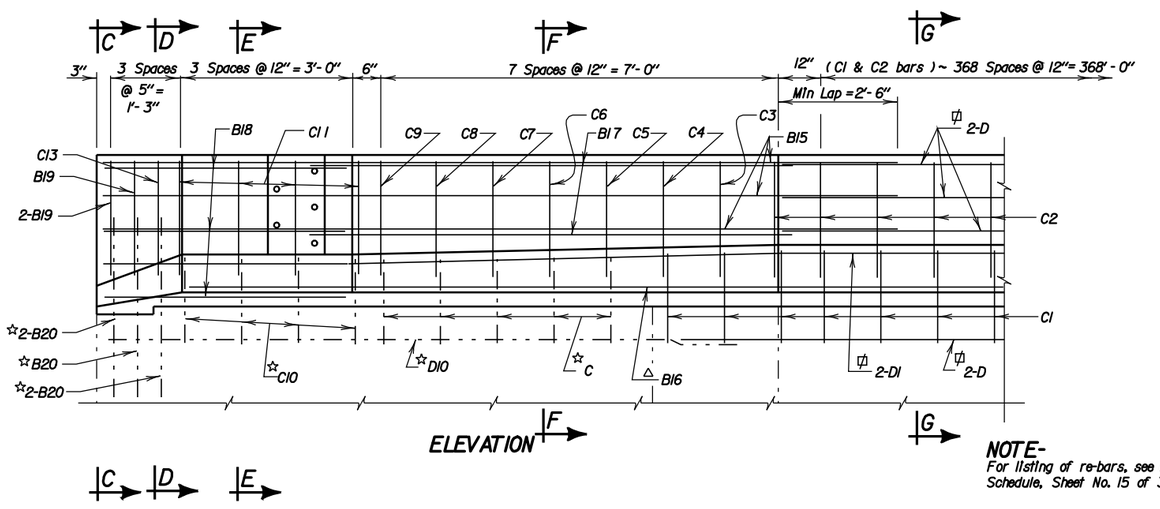

ELEVATION

NOTE-
For listing of re-bars, see Reinforcing Schedule, Sheet No. 15 of 30.

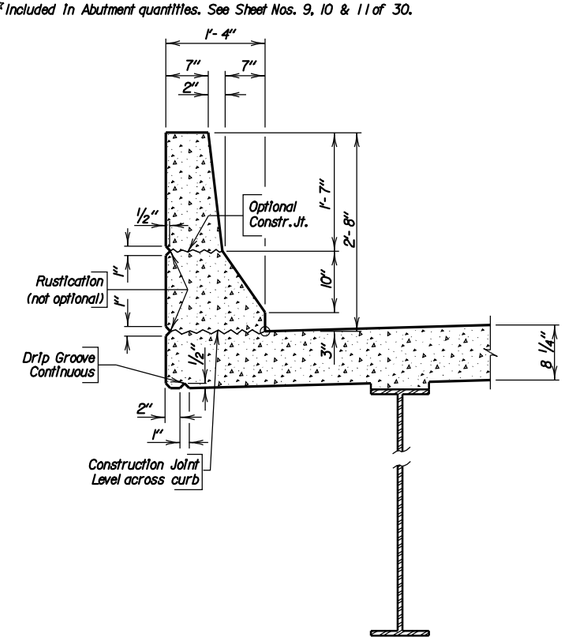

BARRIER DETAILS

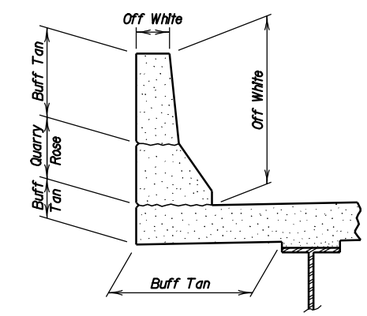

CLASS B COMMERCIAL TEXTURE FINISH COLORS
(See notes on Class B Commercial Texture Finish)

1

END BLOCK AND BARRIER CURB DETAILS
FOR
(NORTHBOUND LANES)

374'-0" CONT. COMP. GIRDER BRIDGE

56'-0" ROADWAY — SEC. 13/24-T101N-R50W
OVER 12th STREET — 0° SKEW
STR. NO. 50-176-210 — IM 29-3(76) 78
STA. 84+32.70 TO STA. 88+06.70 — HS25-44 (& ALT.)

MINNEHAHA COUNTY
S. D. DEPT. OF TRANSPORTATION
DECEMBER 2003 — 16 OF 30

DESIGNED BY	DRAWN BY	CHECKED BY	APPROVED
HE	BK	DC	John C. Cole
STEEL	STEEL II		BRIDGE ENGINEER

STATE OF	PROJECT	SHEET NO.	TOTAL SHEETS
S.D.	Reference		

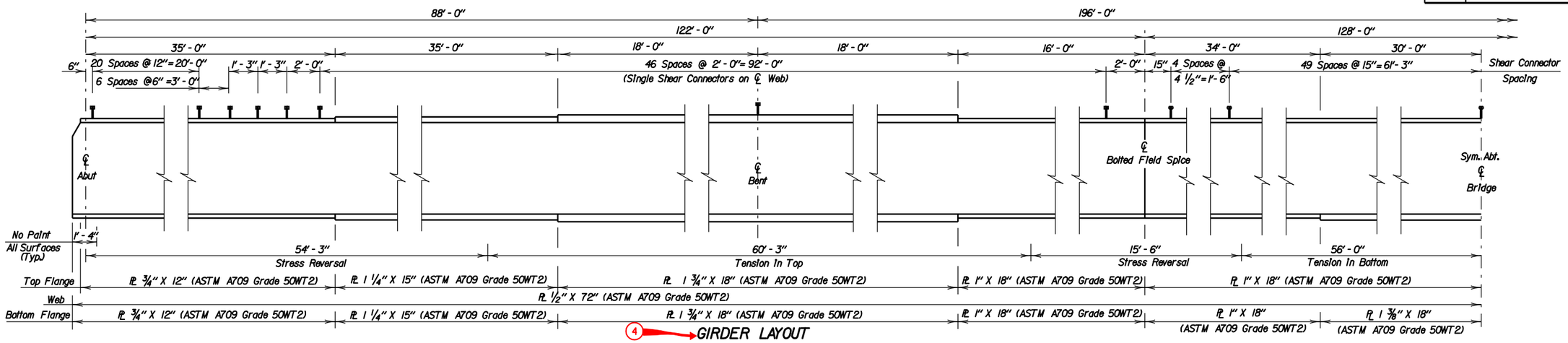

4 GIRDER LAYOUT

2 NOTE: All fillet welds shall terminate 1/2" from edge of stiffener, edge of flange, or clip as appropriate, except weld from clip to edge of stiffener at top flange.

END VIEW 6

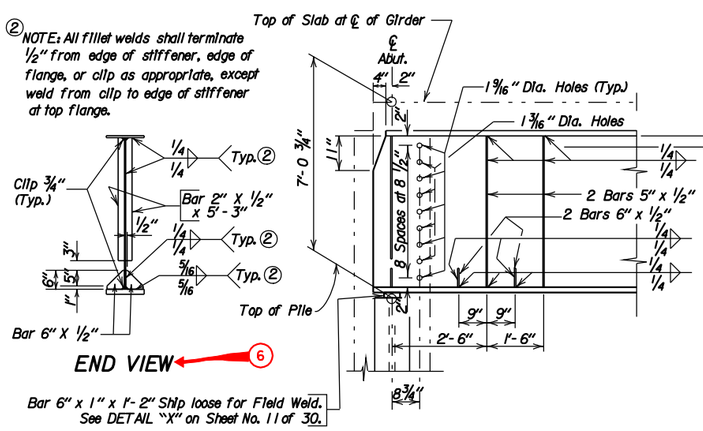

5 TYPICAL SECTION AT ABUTMENTS

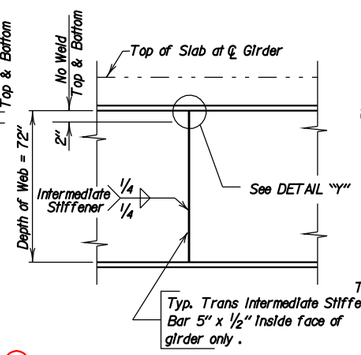

9 TYPICAL SECTION AT INTERMEDIATE STIFFENER

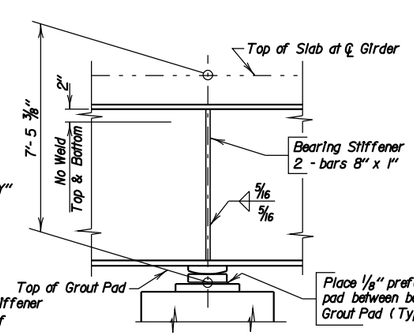

7 TYPICAL SECTION AT BENTS

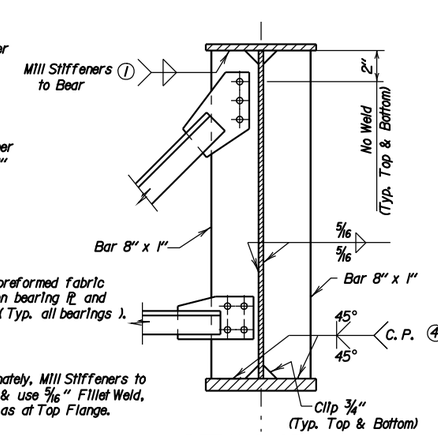

4 Alternately, Mill Stiffeners to Bear & use 5/16" Fillet Weld, same as at Top Flange.

8 DETAILS OF STIFFENERS AT ℄ BEARINGS

(Exterior Girder shown)

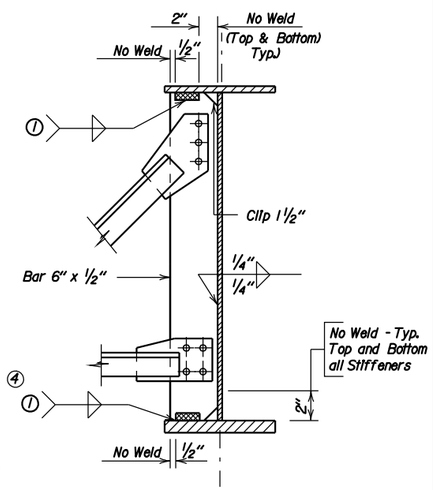

DETAILS OF STIFFENERS AT INTERMEDIATE DIAPHRAGMS 9

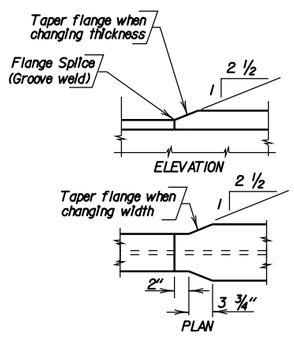

TYPICAL SECTION AT SHOP SPLICE

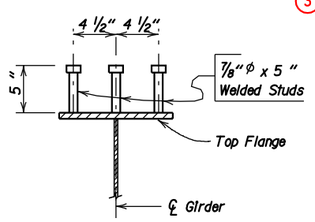

12 SHEAR CONNECTOR DETAILS

Welded Stud Shear Connectors are spaced as shown on Girder Layout. Payment for Shear Connectors will be included in the Lump Sum bid for Structural Steel. 589 Shear Connectors per Girder.

3 NOTES -

1. See Sheet No. 18 of 30 for Diaphragm Details.
2. See Sheet No. 19 of 30 for spacing of Diaphragms and Stiffeners.
3. All dimensions shown are horizontal or vertical.
4. All Stiffeners and Girder Ends shall be made normal to flanges, except bearing stiffeners at abutments and bents shall be vertical.
5. Stiffeners to have tight fit top and bottom.
6. Dimensions shown are for steel temperature of 45°F.
7. Girder Camber shown on Sheet No. 19 of 30.

1 NOTE: All fillet welds attaching diaphragm or bearing stiffeners to girder flanges, shall terminate 1/2" from edge of stiffener, edge of flange, or clip as appropriate. Weld size to be as indicated in the table of Flange to Web Welds.

FLANGE TO WEB WELDS	
Flange Thickness	Fillet Welds
3/4"	1/4"
1 3/4"	5/16"
1 1/4"	5/16"
1 3/8"	5/16"
1"	5/16"

11

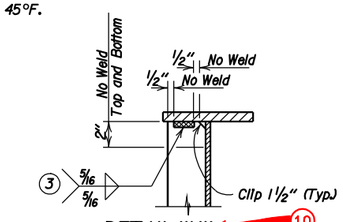

DETAIL "Y" 10

3 Transverse Intermediate Stiffeners shall be welded to the compression flange as shown in DETAIL "Y". In zones of stress reversal the Transverse Intermediate Stiffener shall not be attached to either flange. Ends of Stiffeners not welded shall fit tight enough to exclude water. See Girder Layout above for location of tension flange and zones of stress reversal.

REQUIRED LIST	
1 Title Block	7 Section at Bent
2 Project Block	8 Bearing Stiffeners
3 Standard Notes	9 Section Int. Diaphragm
4 Elevation View	10 Detail "Y"
5 Section at Abutment	11 Flange to Web Welds
6 End View	12 Shear Connectors

1 GIRDER LAYOUT AND DETAILS
FOR
(NORTHBOUND LANES)

374'-0" CONT. COMP. GIRDER BRIDGE

56'-0" ROADWAY — SEC. 13/24-T101N-R50W
OVER 12th STREET — 0° SKEW
STR. NO. 50-176-210 — IM 29-3(76) 78
STA. 84+32.70 TO STA. 88+06.70 — HS25-44 (& ALT.)

MINNEHAHA COUNTY
S. D. DEPT. OF TRANSPORTATION
DECEMBER 2003 17 OF 30

DESIGNED BY	DRAWN BY	CHECKED BY	APPROVED
HE	BK	DC	John C. Cole
STEEL	STEEL 12		BRIDGE ENGINEER

STATE OF	PROJECT	SHEET NO.	TOTAL SHEETS
S.D.	Reference		

2

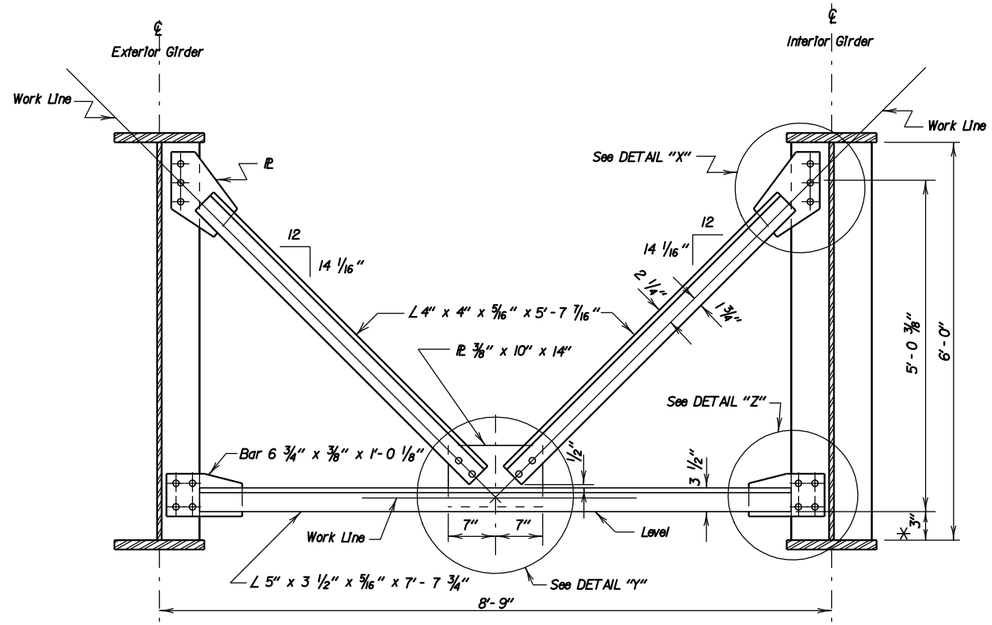

DIAPHRAGM DETAIL

(Weight of One Unit = 237 lbs.)

* 3" above high girder in each bay

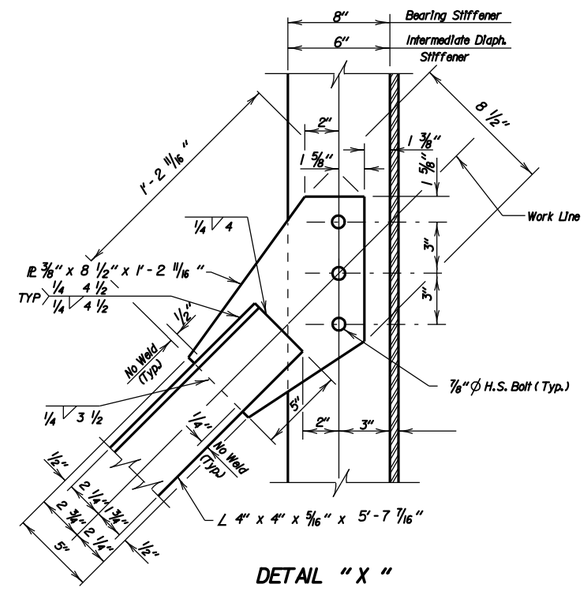

DETAIL "X"

GENERAL NOTES

1. The estimated weight of the Steel Diaphragms is included in the Quantity for Structural Steel shown for informational purposes in the superstructure quantities.
2. The 7/8" ϕ High Strength bolts, nuts and washers shall conform to ASTM Specifications A-325 Type 3. The bolts shall be the heavy hexagon head structural type with heavy semi-finished hexagon nut and hardened washer.
3. Use 1 1/16" ϕ bolt holes in the 3/8" gusset plates and 15/16" ϕ bolt holes in the other members.
4. Direct Tension Indicators shall be adjacent to the 15/16" ϕ holes in stiffener plates and angles.

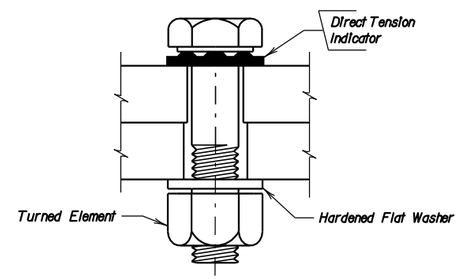

DIRECT TENSION INDICATOR DETAIL

REQUIRED LIST
1 Title Block
2 Project Block
3 Fill out Remainder of Standard Base Sheet

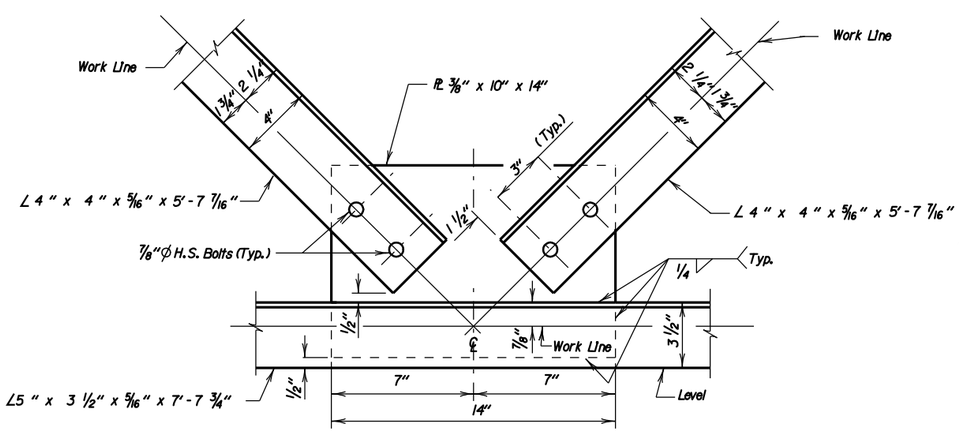

DETAIL "Y"

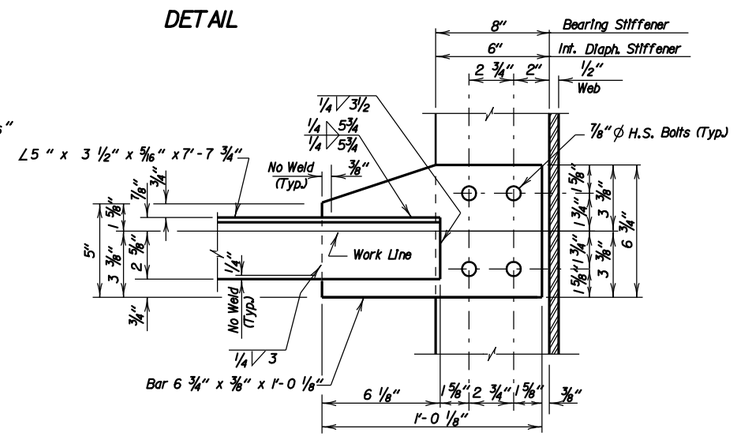

DETAIL "Z"

1

DIAPHRAGM DETAILS
FOR
(NORTHBOUND LANES)

374'-0" CONT. COMP. GIRDER BRIDGE

56'-0" ROADWAY — SEC. 13/24-T101N-R50W
OVER 12th STREET — 0° SKEW
STR. NO. 50-176-210 — IM 29-3(76) 78
STA. 84+32.70 TO STA. 88+06.70 — HS25-44 (& ALT.)

MINNEHAHA COUNTY
S. D. DEPT. OF TRANSPORTATION
DECEMBER 2003 (18) OF (30)

DESIGNED BY	DRAWN BY	CHECKED BY	APPROVED
HE	BK	DC	John C. Cole
STEEL	STEEL 13		BRIDGE ENGINEER

STATE OF	PROJECT	SHEET NO.	TOTAL SHEETS
S.D.	Reference		

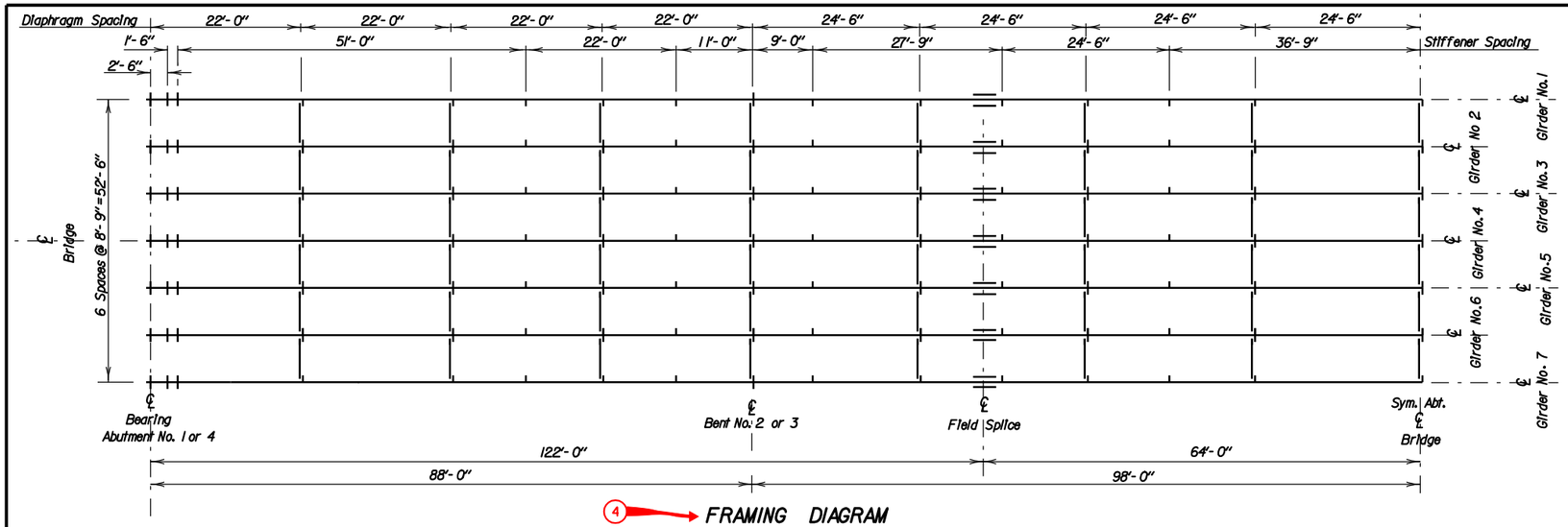

4 FRAMING DIAGRAM

2

3 **NOTE-**
This sheet is to be used in conjunction with Sheet No. 20 of 30.

Camber Diagram shown is for beams in unloaded position and provides for all dead load deflections.

Baseline is a straight line from ℄ Abutment bearing to ℄ Abutment bearing at top of web.

Chord lines are straight lines between ends of beam segments at top of web.

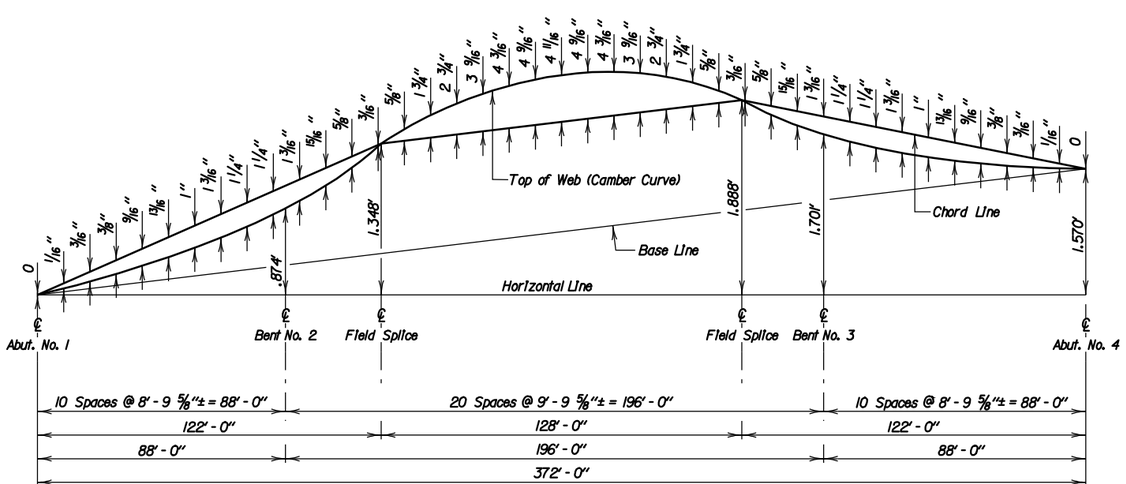

7 CAMBER CUTTING DIAGRAM
(Cut camber into webs of all girders as shown)

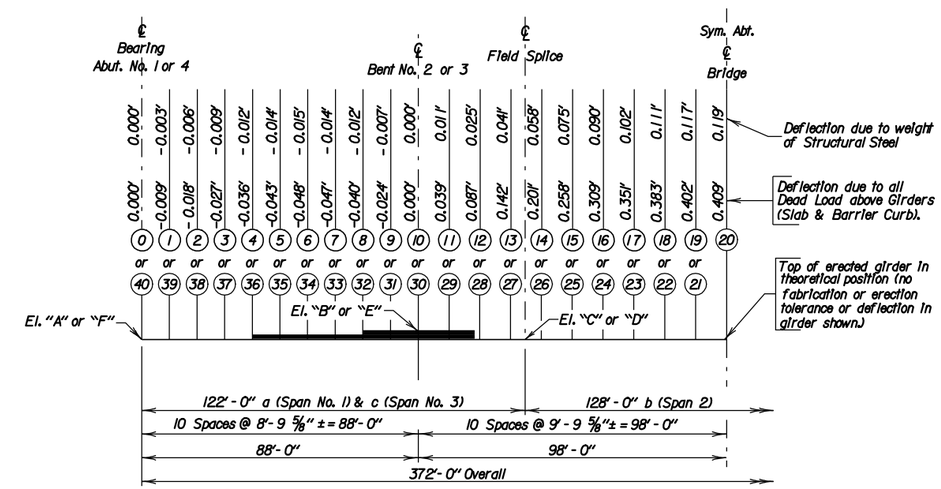

5 GIRDER ERECTION DIAGRAM

6

ϕ GIRDER ERECTION ELEVATIONS AND SLOPES

Girder No.	ELEVATIONS (Top of Girder) "A"	"B"	"C"	"D"	"E"	"F"	SLOPES (%) a	b	c
1	1441.291	1442.248	1442.610	1443.150	1443.075	1442.861	1.064	.422	-.220
2	1441.466	1442.423	1442.785	1443.325	1443.250	1443.036	1.064	.422	-.220
3	1441.641	1442.598	1442.960	1443.500	1443.425	1443.211	1.064	.422	-.220
4	1441.546	1442.503	1442.865	1443.405	1443.330	1443.116	1.064	.422	-.220
5	1441.327	1442.284	1442.646	1443.186	1443.112	1442.897	1.064	.422	-.220
6	1441.108	1442.066	1442.427	1442.968	1442.893	1442.678	1.064	.422	-.220
7	1440.890	1441.847	1442.209	1442.749	1442.674	1442.459	1.064	.422	-.220

NOTE-
ϕ These elevations and slopes occur at a time after girder erection is completed but prior to any placement of concrete. Slopes shown are an imaginary straight line between points at beam ends and are (+) towards increasing stations.

REQUIRED LIST

1. Title Block
2. Project Block
3. Notes
4. Framing Diagram
5. Girder Erection Diagram
6. Girder Erection Elevation Table
7. Camber Cutting Details

1 FRAMING DIAGRAM, CAMBER & ERECTION DATA
FOR
(NORTHBOUND LANES)

374'-0" CONT. COMP. GIRDER BRIDGE

56'-0" ROADWAY — SEC. 13/24-T101N-R50W
OVER 12th STREET — 0° SKEW
STR. NO. 50-176-210 — IM 29-3(76) 78
STA. 84+32.70 TO STA. 88+06.70 — HS25-44
(& ALT.)

MINNEHAHA COUNTY
S. D. DEPT. OF TRANSPORTATION
DECEMBER 2003 (19) OF (30)

DESIGNED BY	DRAWN BY	CHECKED BY	APPROVED
HE	BK	DC	John C. Cole
STEEL	STEEL 14		BRIDGE ENGINEER

STATE OF	PROJECT	SHEET NO.	TOTAL SHEETS
S.D.	Reference		

TABLE OF SLAB FORM ELEVATIONS & COMPUTATIONS

		0	1	2	3	4	5	6	7	8	9	10	11	12	13	14	15	16	17	18	19	20
Girder No.1	Elev. "M"	1442.145	1442.238	1442.327	1442.413	1442.496	1442.578	1442.659	1442.743	1442.830	1442.922	1443.019	1443.136	1443.258	1443.384	1443.509	1443.629	1443.739	1443.836	1443.918	1443.985	1444.035
	(−) Elev."N"																					
	(=) d																					
	(−) 0.688																					
	(=) h																					
Girder No.2	Elev. "M"	1442.320	1442.413	1442.502	1442.588	1442.671	1442.753	1442.834	1442.918	1443.005	1443.097	1443.194	1443.311	1443.433	1443.559	1443.684	1443.804	1443.914	1444.011	1444.093	1444.160	1444.210
	(−) Elev."N"																					
	(=) d																					
	(−) 0.688																					
	(=) h																					
Girder No.3	Elev. "M"	1442.495	1442.588	1442.677	1442.763	1442.846	1442.928	1443.009	1443.093	1443.180	1443.272	1443.369	1443.486	1443.608	1443.734	1443.859	1443.979	1444.089	1444.186	1444.268	1444.335	1444.385
	(−) Elev."N"																					
	(=) d																					
	(−) 0.688																					
	(=) h																					
Girder No.4	Elev. "M"	1442.400	1442.493	1442.582	1442.668	1442.751	1442.833	1442.914	1442.998	1443.085	1443.177	1443.274	1443.391	1443.513	1443.639	1443.764	1443.884	1443.994	1444.091	1444.173	1444.240	1444.290
	(−) Elev."N"																					
	(=) d																					
	(−) 0.688																					
	(=) h																					
Girder No.5	Elev. "M"	1442.181	1442.274	1442.363	1442.449	1442.532	1442.614	1442.696	1442.779	1442.866	1442.958	1443.055	1443.172	1443.294	1443.420	1443.546	1443.665	1443.775	1443.872	1443.954	1444.021	1444.071
	(−) Elev."N"																					
	(=) d																					
	(−) 0.688																					
	(=) h																					
Girder No.6	Elev. "M"	1441.962	1442.055	1442.145	1442.230	1442.314	1442.395	1442.477	1442.560	1442.647	1442.739	1442.837	1442.953	1443.076	1443.202	1443.327	1443.446	1443.556	1443.653	1443.736	1443.802	1443.852
	(−) Elev."N"																					
	(=) d																					
	(−) 0.688																					
	(=) h																					
Girder No.7	Elev. "M"	1441.744	1441.837	1441.926	1442.012	1442.095	1442.177	1442.258	1442.341	1442.428	1442.520	1442.618	1442.735	1442.857	1442.983	1443.108	1443.228	1443.338	1443.434	1443.517	1443.583	1443.633
	(−) Elev."N"																					
	(=) d																					
	(−) 0.688																					
	(=) h																					

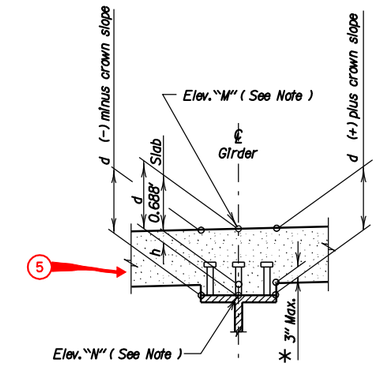

* If during construction, it is found that this dimension will be exceeded or is less than zero, corrective measures must be taken as approved by the Engineer.

REQUIRED LIST

1. Title Block
2. Project Block
3. Notes
4. Elevation Calculation Table
5. Haunch Detail and Notes

TABLE OF SLAB FORM ELEVATIONS & COMPUTATIONS

		21	22	23	24	25	26	27	28	29	30	31	32	33	34	35	36	37	38	39	40
Girder No.1	Elev. "M"	1444.067	1444.084	1444.084	1444.070	1444.042	1444.006	1443.963	1443.920	1443.880	1443.846	1443.823	1443.805	1443.792	1443.783	1443.776	1443.769	1443.760	1443.748	1443.733	1443.715
	(−) Elev."N"																				
	(=) d																				
	(−) 0.688																				
	(=) h																				
Girder No.2	Elev. "M"	1444.242	1444.259	1444.259	1444.245	1444.217	1444.181	1444.138	1444.095	1444.055	1444.021	1443.998	1443.980	1443.967	1443.958	1443.951	1443.944	1443.935	1443.923	1443.908	1443.890
	(−) Elev."N"																				
	(=) d																				
	(−) 0.688																				
	(=) h																				
Girder No.3	Elev. "M"	1444.417	1444.434	1444.434	1444.420	1444.392	1444.356	1444.313	1444.270	1444.230	1444.196	1444.173	1444.155	1444.142	1444.133	1444.126	1444.119	1444.110	1444.098	1444.083	1444.065
	(−) Elev."N"																				
	(=) d																				
	(−) 0.688																				
	(=) h																				
Girder No.4	Elev. "M"	1444.322	1444.339	1444.339	1444.325	1444.297	1444.261	1444.218	1444.175	1444.135	1444.101	1444.078	1444.060	1444.047	1444.038	1444.031	1444.024	1444.015	1444.003	1443.988	1443.970
	(−) Elev."N"																				
	(=) d																				
	(−) 0.688																				
	(=) h																				
Girder No.5	Elev. "M"	1444.104	1444.120	1444.120	1444.106	1444.079	1444.042	1443.999	1443.956	1443.916	1443.882	1443.859	1443.841	1443.829	1443.820	1443.813	1443.805	1443.796	1443.785	1443.770	1443.751
	(−) Elev."N"																				
	(=) d																				
	(−) 0.688																				
	(=) h																				
Girder No.6	Elev. "M"	1443.885	1443.901	1443.901	1443.887	1443.860	1443.823	1443.781	1443.737	1443.698	1443.664	1443.640	1443.623	1443.610	1443.601	1443.594	1443.586	1443.577	1443.566	1443.551	1443.532
	(−) Elev."N"																				
	(=) d																				
	(−) 0.688																				
	(=) h																				
Girder No.7	Elev. "M"	1443.666	1443.682	1443.683	1443.668	1443.641	1443.604	1443.562	1443.519	1443.479	1443.445	1443.422	1443.404	1443.391	1443.382	1443.375	1443.368	1443.359	1443.347	1443.332	1443.314
	(−) Elev."N"																				
	(=) d																				
	(−) 0.688																				
	(=) h																				

NOTE-
This sheet is to be used in conjunction with Sheet No. 19 of 30.

NOTE :
This Table contains the necessary information to determine the depth of concrete, in feet, over the girders at the points shown. All calculations can be carried out in the space provided. Elevation "M" is theoretical top of slab elevation before any concrete has been poured. This elevation includes correction for deflection due to Dead Load above girders. Elevation "N" is a field measured elevation taken on top of girders at points shown. This elevation must be taken after girder erection is complete, but prior to placing any of the slab concrete. Girders shall not be supported by construction shoring while elevations are taken.

SLAB FORM ELEVATION
FOR
(NORTHBOUND LANES)

374'-0" CONT. COMP. GIRDER BRIDGE

56'-0" ROADWAY — SEC. 13/24-T101N-R50W
OVER 12th STREET — 0° SKEW
STR. NO. 50-176-210 — IM 29-3(76) 78
STA. 84+32.70 TO STA. 88+06.70 — HS25-44 (& ALT.)

MINNEHAHA COUNTY
S. D. DEPT. OF TRANSPORTATION
DECEMBER 2003 — 20 OF 30

DESIGNED BY	DRAWN BY	CHECKED BY	APPROVED
HE	BK	DC	John C. Cole
STEEL	STEEL 15		BRIDGE ENGINEER

STATE OF	PROJECT	SHEET NO.	TOTAL SHEETS
S.D.	Reference		

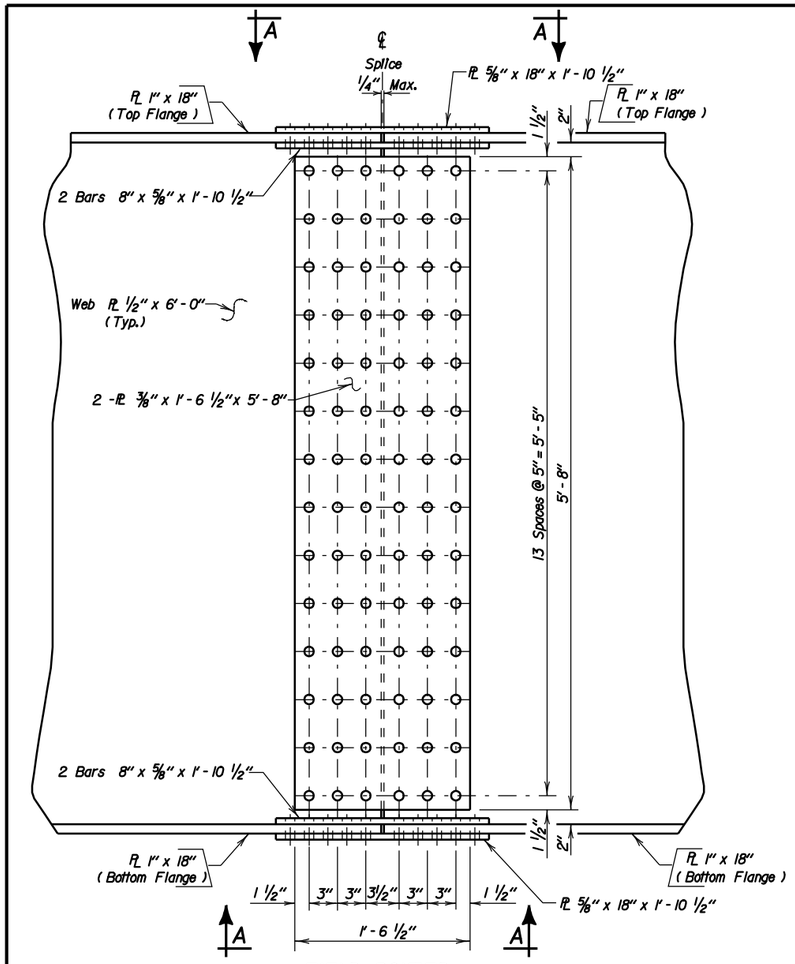

3 FIELD BOLTED SPLICE DETAIL (Typ.)

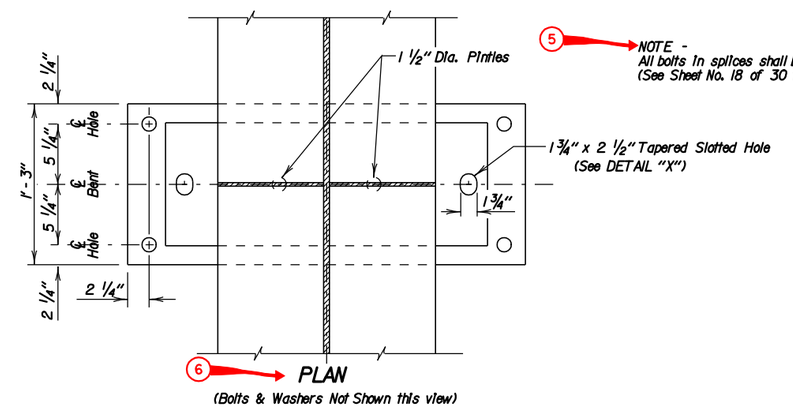

6 PLAN
(Bolts & Washers Not Shown this view)

5 NOTE -
All bolts in splices shall be 7/8" A325 Type 3 High Strength Bolts
(See Sheet No. 18 of 30 for Direct Tension Indicator Detail)

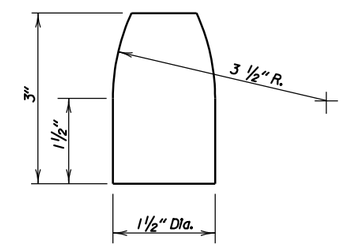

PINTLE DETAIL

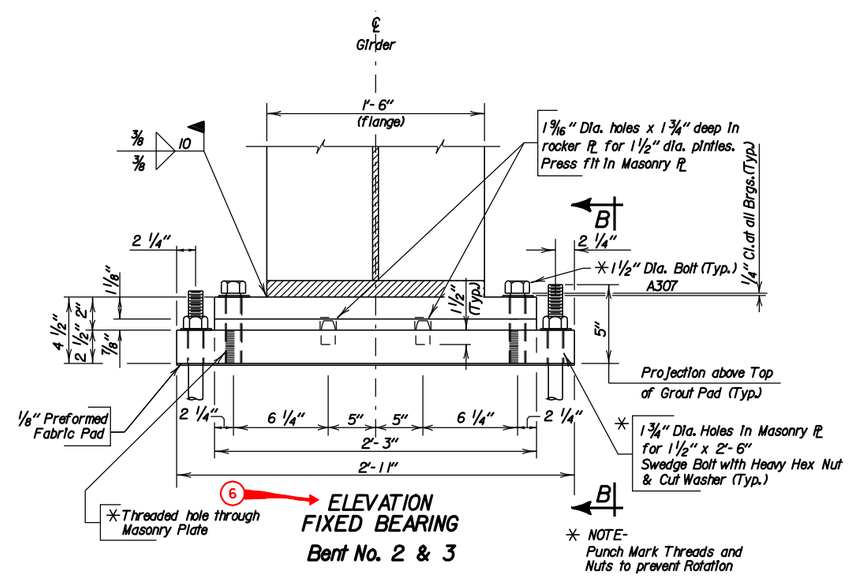

6 ELEVATION FIXED BEARING
Bent No. 2 & 3

* NOTE-
Punch Mark Threads and Nuts to prevent Rotation

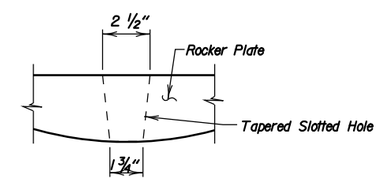

6 DETAIL "X"

REQUIRED LIST	
1 Title Block	4 Flange View as Required
2 Project Block	5 Bolt Note
3 Elevation View	6 Bearing Details

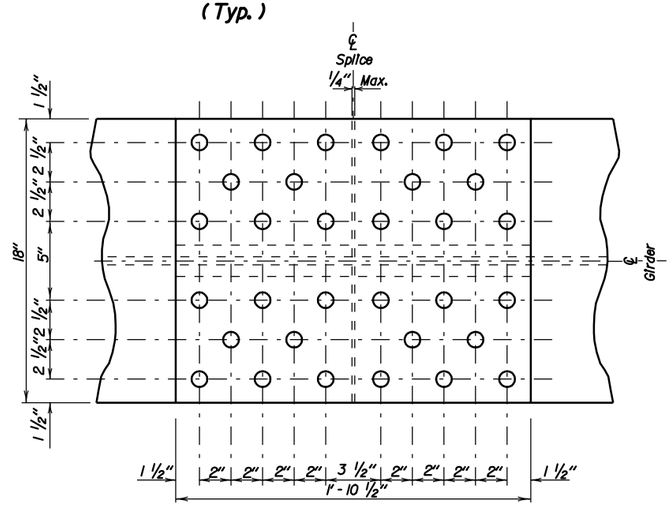

4 TOP & BOTTOM FLANGE
(VIEW A - A)

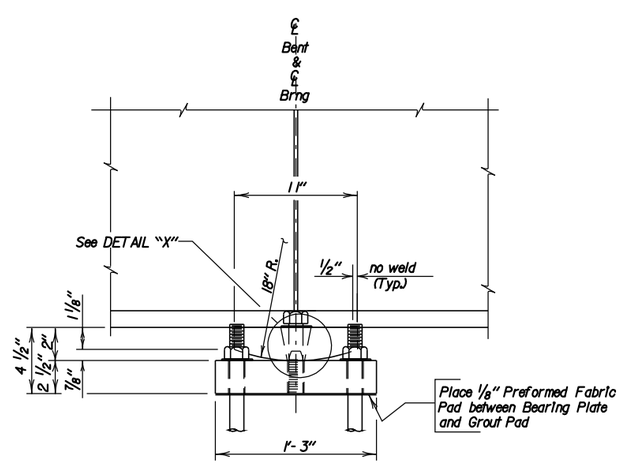

6 VIEW B - B

1 DETAILS OF BOLTED FIELD SPLICE AND BEARINGS
FOR
(NORTHBOUND LANES)

374'-0" CONT. COMP. GIRDER BRIDGE

56'-0" ROADWAY — SEC. 13/24-T101N-R50W
OVER 12th STREET — 0° SKEW
STR. NO. 50-176-210 — IM 29-3(76) 78
STA. 84+32.70 TO STA. 88+06.70 — HS25-44 (& ALT.)

MINNEHAHA COUNTY
S. D. DEPT. OF TRANSPORTATION
DECEMBER 2003 — 21 OF 30

DESIGNED BY	DRAWN BY	CHECKED BY	APPROVED
HE	BK	DC	John C. Cole
STEEL	STEEL 16		BRIDGE ENGINEER

STATE OF	PROJECT	SHEET NO.	TOTAL SHEETS
S.D.	Reference		

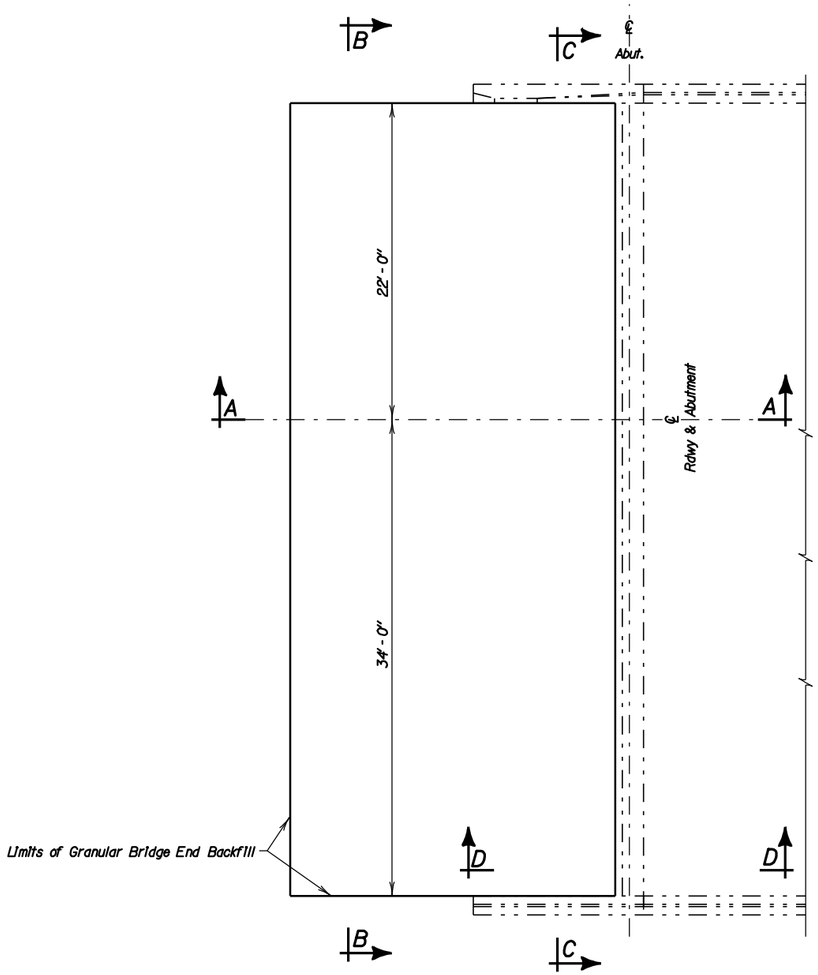

4 * PLAN

* NOTE:
Bridge End Backfill shown adjacent to Abut. No. 1.
Abut. No. 4 will be similar by opposite hand.

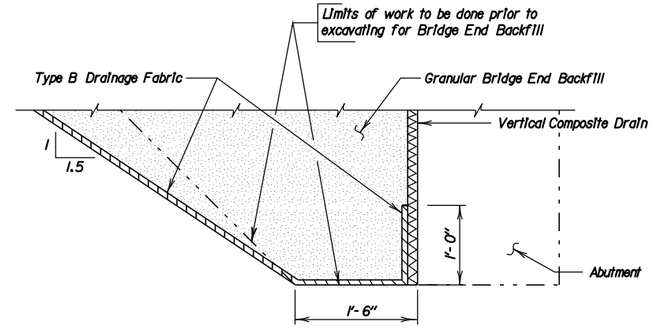

8 DETAIL "X"

2

3

ESTIMATED QUANTITIES
(for 2 abutments)

ITEM	UNIT	QUANTITY
⌀ Bridge End Backfill Excavation	Cu. Yd.	58
Bridge End Backfill	Cu. Yd.	360

1. 3930 sq. ft. 6 mil Polyethylene Sheeting, not including laps.
2. 360 cu. yd. Granular Bridge End Backfill.
3. 376 sq. yds. Type B Drainage Fabric.
4. 983 sq. ft. Vertical Composite Drain.
5. 48 sq. yd. MSE Geotextile Fabric.

Items 1 thru 5 are approximate quantities contained in the above bid items and are for information only.

⌀ Bridge End Backfill Excavation will not be measured. Plans quantity payment will be full compensation for this item.

REQUIRED LIST

1 Title Block	5 Sec. A-A at Center Line
2 Project Block	6 Sec. C-C at Abut. Face
3 Estimated Quantities	7 Sec. B-B Thru Sleeper Slab
4 Plan View	8 Detail "X"

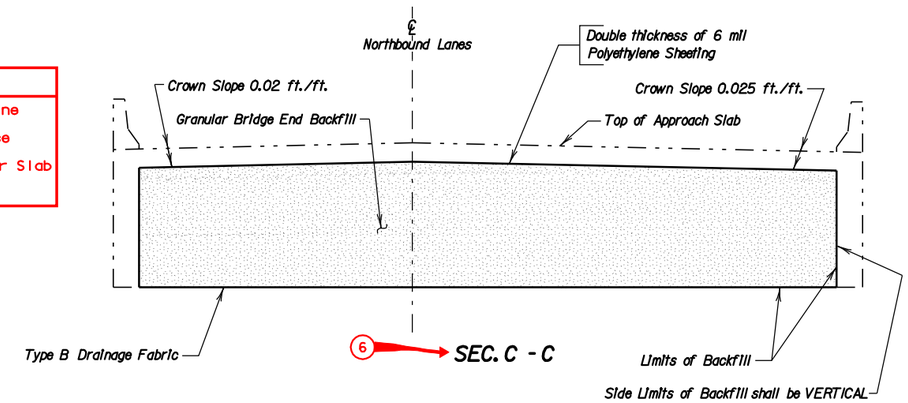

6 SEC. C - C

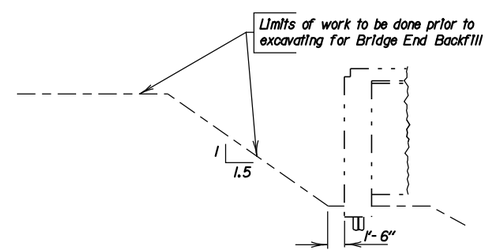

SEC. D-D
(TYP.)

7 SEC. B - B
(If a Sleeper Slab Under Drain is used)

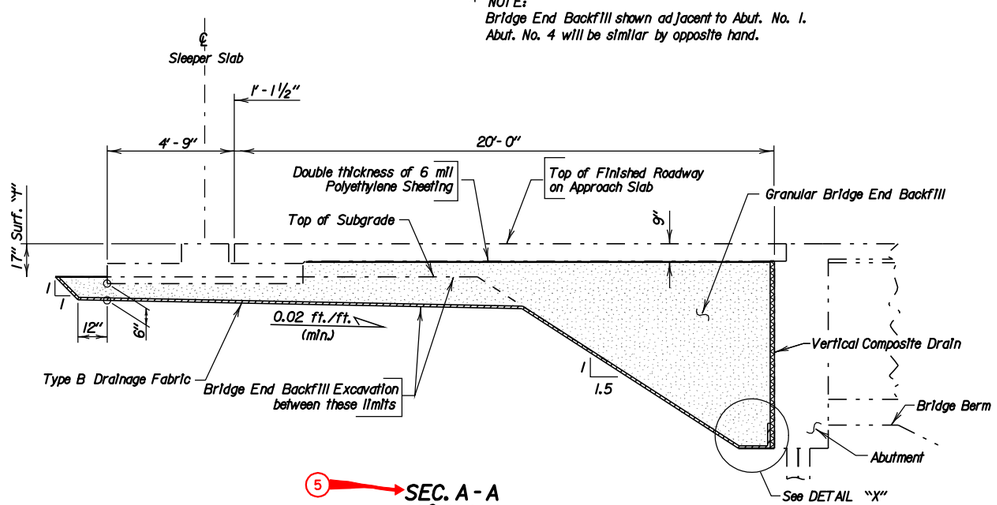

5 SEC. A - A
(at ℄ Roadway)

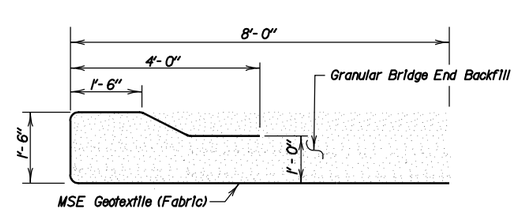

Typical Fabric Lift and Wrap at Sides
(Between End of Wing Wall and Edge of Sleeper Slab)

1 DETAILS OF BRIDGE END BACKFILL
FOR
(NORTHBOUND LANES)

374'-0" CONT. COMP. GIRDER BRIDGE

56'-0" ROADWAY — SEC. 13/24-T101N-R50W
OVER 12th STREET — 0° SKEW
STR. NO. 50-176-210 — IM 29-3(76) 78
STA. 84+32.70 TO STA. 88+06.70 — HS25-44
(& ALT.)

MINNEHAHA COUNTY
S. D. DEPT. OF TRANSPORTATION
DECEMBER 2003 22 OF 30

DESIGNED BY	DRAWN BY	CHECKED BY	APPROVED
HE	BK	DC	John C. Cole
STEEL	STEEL 17		BRIDGE ENGINEER

STATE OF	PROJECT	SHEET NO.	TOTAL SHEETS
S.D.	Reference		

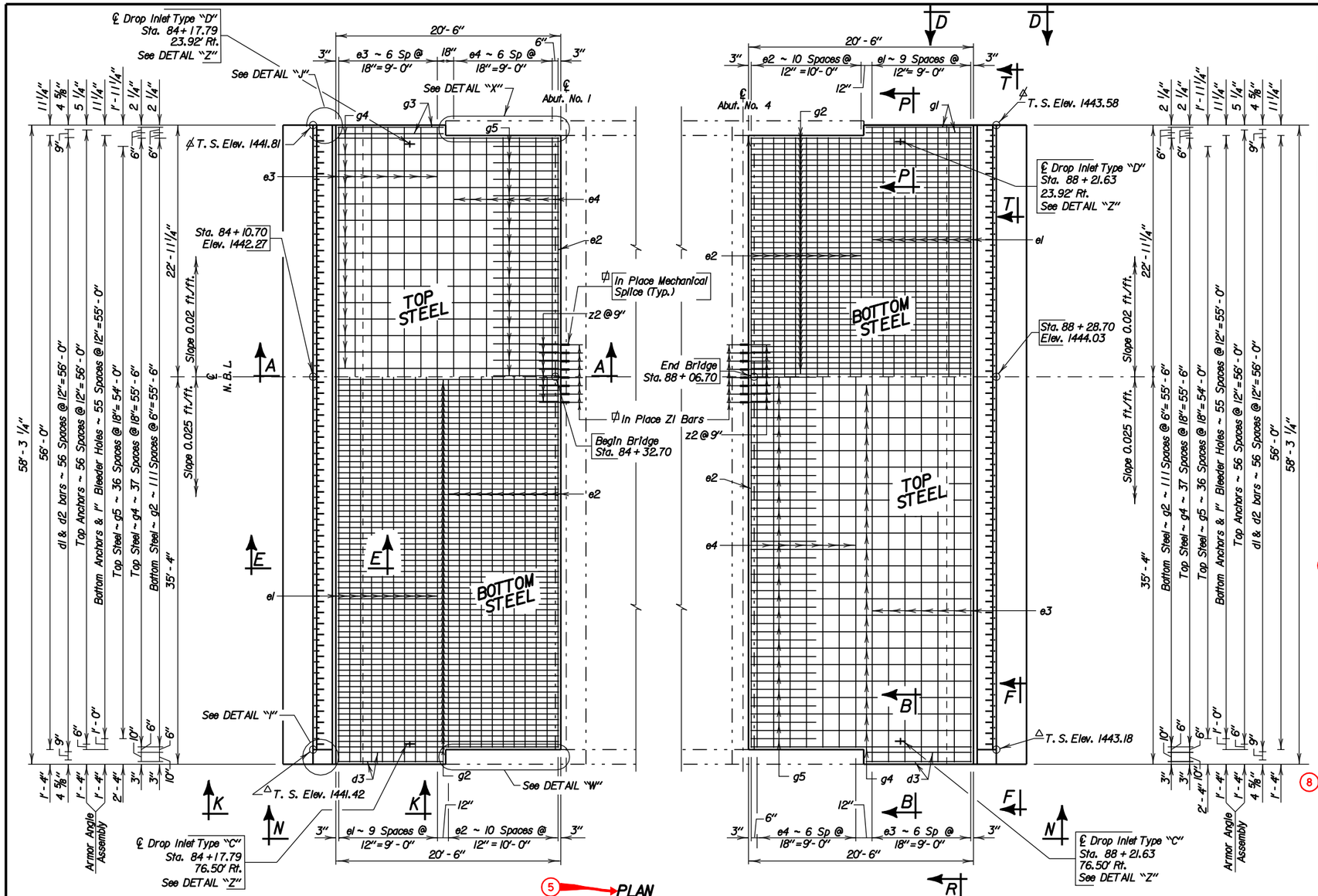

5 PLAN

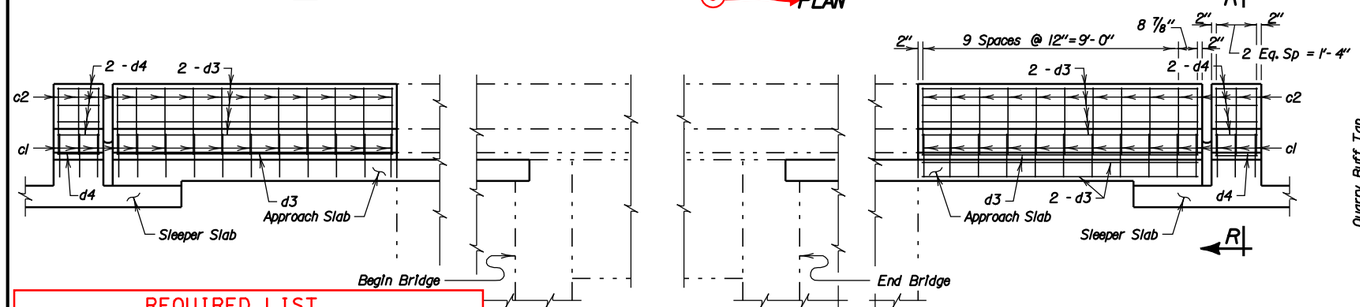

7 ELEVATION - BARRIER (VIEW N - N)

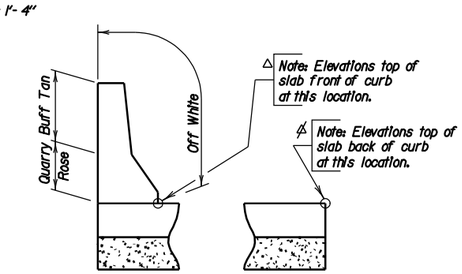

SEC. F-F SEC. T-T

6 CLASS B COMMERCIAL TEXTURE FINISH COLORS

(See notes on Class B Commercial Texture Finish)

REINFORCING SCHEDULE

(For Two Approach Slabs; Two Sleeper Slabs and Barrier Curbs)

Mk.	No.	Size	Length	Type
Sleeper Slabs				
c1	6	5	5'-11"	T2A
♦ c3	52	5	57'-11"	Str.
d1	236	4	7'-9"	2
d2	118	4	6'-7"	T2
Barrier Curbs				
c2	28	5	5'-1"	S11
d3	26	5	9'-9"	Str.
d4	18	5	1'-5"	Str.
Approach Slabs				
a3	16	4	7'-4"	19A
c1	22	5	5'-11"	T2A
♦ e1	20	6	58'-0"	Str.
♦ e2	24	6	55'-8"	Str.
♦ e3	14	4	58'-0"	Str.
♦ e4	14	4	55'-8"	Str.
g1	4	8	9'-8"	Str.
g2	224	8	20'-2"	Str.
g3	4	4	9'-8"	Str.
g4	76	4	20'-2"	Str.
g5	74	4	6'-0"	Str.
z2	150	7	2'-0"	Str.

Bending Details

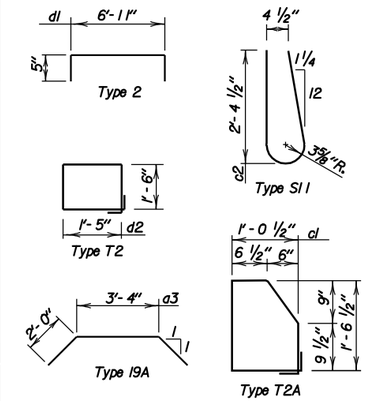

NOTE –
All Bars to be Epoxy Coated.
All dimensions are out to out of bars.

♦ If phased construction is used, submit splice details for approval. The additional cost for splices shall be borne by the Contractor.

ESTIMATED QUANTITIES

(For Two Approach Slabs and Two Sleeper Slabs)

ITEM	UNIT	QUANTITY
Concrete Approach Slab for Bridge	Sq. Yd.	260.2
Concrete Approach Sleeper Slab for Bridge	Sq. Yd.	93.9
Compression Seal	Ft.	116.5

1. 69.2 Cu. Yds. Concrete in Approach Slab.
2. 19150 Lbs. Epoxy Coated Re-Steel in Approach Slab.
3. 31.7 Cu. Yds. Concrete in Sleeper Slab.
4. 4919 Lbs. Epoxy Coated Re-Steel in Sleeper Slab.
5. 6317 Lbs. Structural Steel in Armor Assembly.
6. 1.7 Cu. Yds. Concrete in Barrier Curbs.
7. 439 Lbs. Re-steel in Barrier Curbs.
8. 58 Sq. Ft. 2" Polystyrene Insulation Board

Items 1 thru 8 are approximate quantities contained in the above bid items and are for information only.

✳ Add a3 bar at top and bottom layer of steel as shown.

NOTE -
This sheet is to be used in conjunction with Sheet No. 24 of 30.

℄ Included in Superstructure Quantities.

★ Cut all Bars in area of drop inlet as shown.

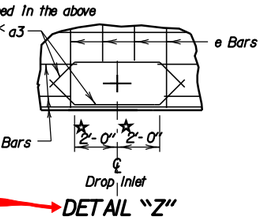

7 DETAIL "Z"

1 DETAILS OF APPROACH SLAB ADJ. TO BRIDGE FOR (NORTHBOUND LANES)

374'-0" CONT. COMP. GIRDER BRIDGE

56'-0" ROADWAY — SEC. 13/24-T101N-R50W
OVER 12th STREET — 0° SKEW
STR. NO. 50-176-210 — IM 29-3(76) 78
STA. 84+32.70 TO STA. 88+06.70 — HS25-44 (& ALT.)

MINNEHAHA COUNTY
S. D. DEPT. OF TRANSPORTATION
DECEMBER 2003 23 OF 30

DESIGNED BY	DRAWN BY	CHECKED BY	APPROVED
HE	BK	DC	John C. Cole
STEEL	STEEL 18		BRIDGE ENGINEER

REQUIRED LIST

1. Title Block
2. Project Block
3. Reinforcing Schedule
4. Estimated Quantities
5. Plan View
6. Sections as Required
7. Details as Required
8. Notes

STATE OF	PROJECT	SHEET NO.	TOTAL SHEETS
S.D.	Reference		

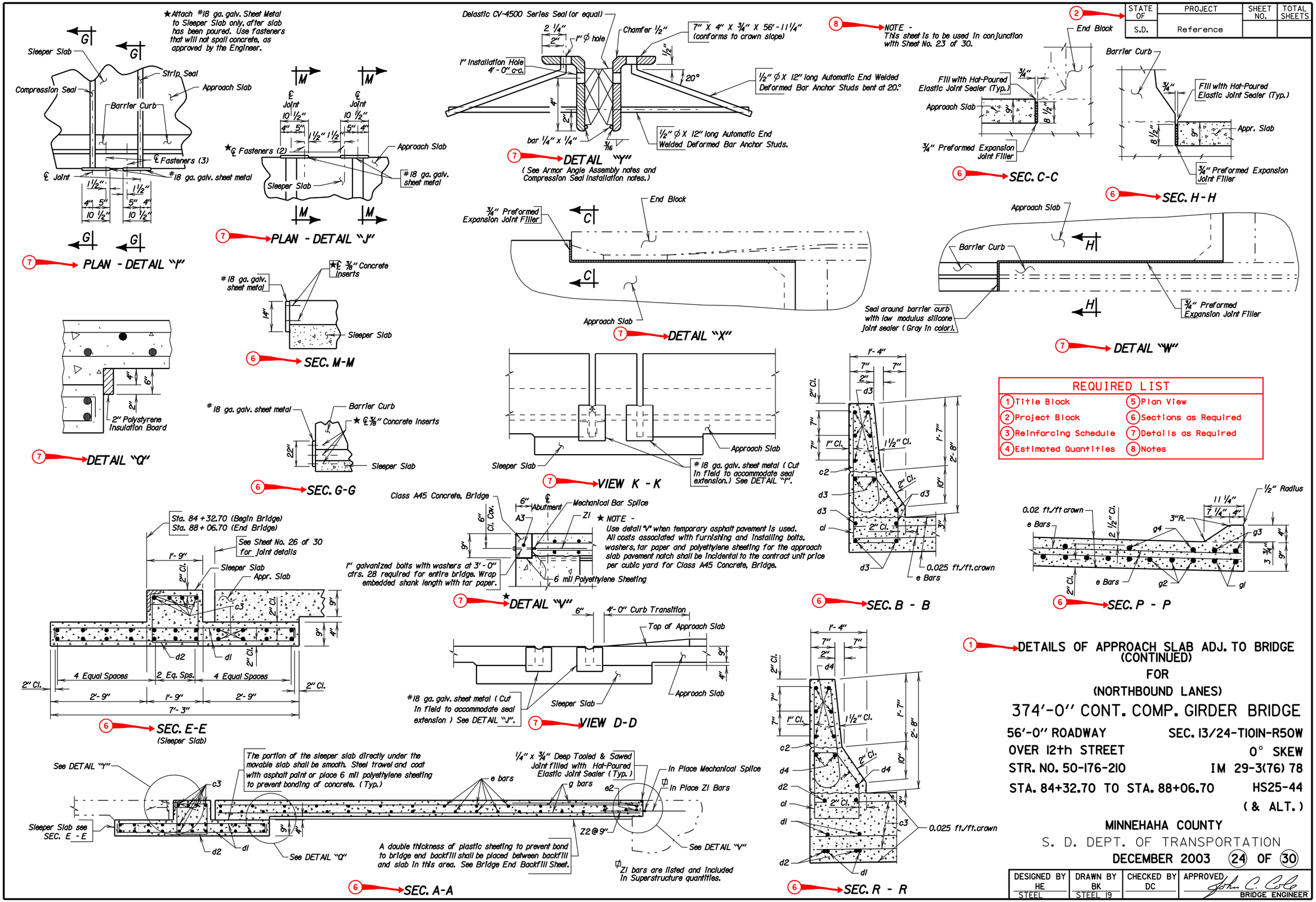

REQUIRED LIST

1. Title Block
2. Project Block
3. Reinforcing Schedule
4. Estimated Quantities
5. Plan View
6. Sections as Required
7. Details as Required
8. Notes

DETAILS OF APPROACH SLAB ADJ. TO BRIDGE (CONTINUED)

FOR

(NORTHBOUND LANES)

374'-0" CONT. COMP. GIRDER BRIDGE

56'-0" ROADWAY — SEC. 13/24-T101N-R50W

OVER 12th STREET — 0° SKEW

STR. NO. 50-176-210 — IM 29-3(76) 78

STA. 84+32.70 TO STA. 88+06.70 — HS25-44 (& ALT.)

MINNEHAHA COUNTY

S. D. DEPT. OF TRANSPORTATION

DECEMBER 2003 — 24 OF 30

DESIGNED BY	DRAWN BY	CHECKED BY	APPROVED
HE	BK	DC	John C. Cole
STEEL	STEEL 19		BRIDGE ENGINEER

STATE OF	PROJECT	SHEET NO.	TOTAL SHEETS
S.D.	Reference		

2

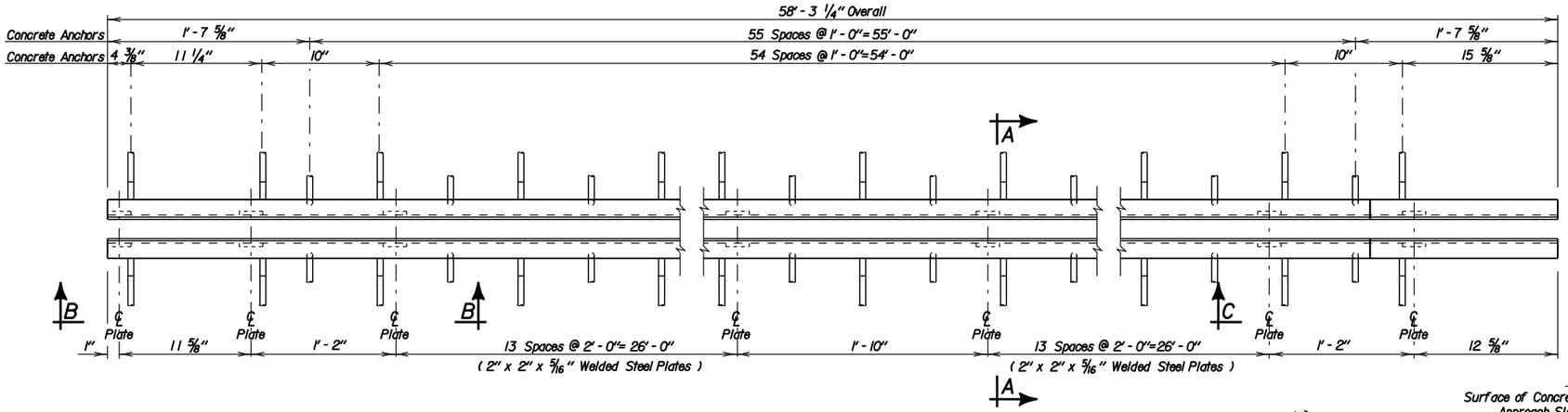

PLAN OF STRIP SEAL

(Neoprene Seal not shown)

TEMP.	DIMENSION "X"
30°	3"
40°	2 7/8"
50°	2 11/16"
60°	2 9/16"
70°	2 3/8"
80°	2 3/16"
90°	2 1/16"

DETAIL "C"

Neoprene Seal shall have a 5" movement capability.

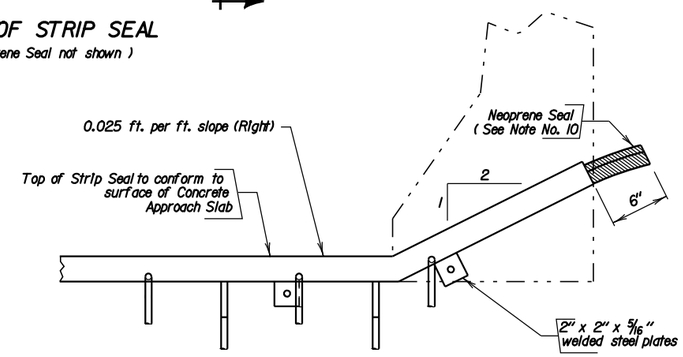

VIEW C - C

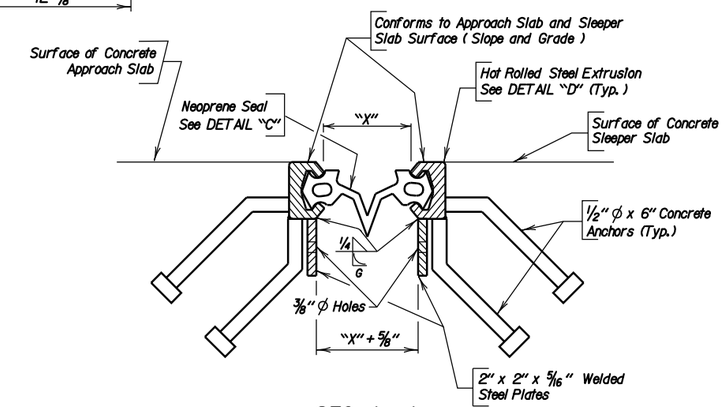

SEC. A - A

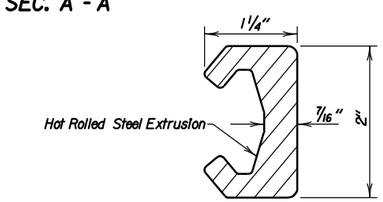

DETAIL "D"

GENERAL NOTES:

1. Materials for the Steel Extrusion shall conform to ASTM-A36, A242 or A588. Materials for the 2" x 2" x 5/16" welded steel plates shall conform to ASTM-A36. Material for the 1/2" diameter x 6" Concrete Anchors shall conform to Type A steel studs of Section 7 of the latest edition of the ANSI/AWS D1.1 Structural Welding Code-Steel.

2. Material for the neoprene seal shall conform to ASTM D2628 modified to omit the recovery test. No splices will be permitted in the neoprene seal.

3. The lubricant-adhesive used to install the neoprene seal shall conform to the requirements of ASTM D4070. The neoprene seal and the lubricant adhesive should be supplied or recommended by the same source as they must be compatible.

4. The installation of the neoprene seal shall be as recommended by its Manufacturer and approved by the Engineer, but in general shall be as follows: The neoprene seal shall be installed and bonded to the steel extrusion with a high-solids lubricant adhesive. The neoprene surfaces shall be roughened with a wire brush before the application of the lubricant adhesive. The neoprene seal may be installed either prior to or after the time the steel extrusions are concreted in the approach slabs. The steel extrusion shall be dry, clean, free from dirt, grease and contaminants at the time the neoprene seal is installed.

5. Due to the length of the steel extrusions, splices are permitted. No welds shall be permitted in the internal section of the extrusion where the neoprene seal is located. Weld details shall be shown on the shop plans for approval by the Engineer. Welding shall be in accordance with latest edition of the ANSI/AWS D1.1 Structural Welding Code-Steel. Galvanize the steel extrusions and anything welded to them after all welding is completed. They shall be galvanized in accordance with AASHTO M111 (ASTM A123). If welded splices are used subsequent to galvanizing, the weld details and the procedures for preparing the surface for welding and repairing the galvanizing after welding shall be included with the shop plans. Repair of galvanizing shall be by the zinc-based solder method in conformance with ASTM A780.

6. The thickness and shape of the neoprene seal may vary from the sketch shown (Detail "C" on this sheet) according to the manufacturer's design; however, the wedge lugs must properly fit the groove in the steel extrusion. Before installation, the shop plans of the proposed neoprene seal showing the fixed dimensions, thickness of neoprene seal, and dimensions pertinent to the fit of the neoprene seal in the steel extrusion shall be submitted to and approved by the Engineer.

7. Since the configuration and dimensions of the steel extrusion may vary according to each manufacturer's design, they need not conform exactly to that shown in DETAIL "D", however, any deviations from the plan shown configuration or dimensions must be approved by the Office of Bridge Design.

8. The Strip Seal Expansion Joint supplier shall submit a detailed gland installation procedure with the shop plans.

9. The cost of welding shall be included in the unit cost for Strip Seal Expansion Joint.

10. The neoprene seal shall be of sufficient length such that a minimum length of 6" shall extend beyond each end of the steel extrusions.

11. The Strip Seal Expansion Joint will be measured in linear feet to the nearest one-tenth foot, complete in place. Measurement will be made of the overall horizontal length. The Strip Seal Expansion Joint will be paid for at the contract unit price per linear foot complete in place. Payment for this item shall be full compensation for furnishing all the required materials in place, inclusive of labor, equipment and incidentals necessary to complete the work in accordance with plans and the foregoing specifications.

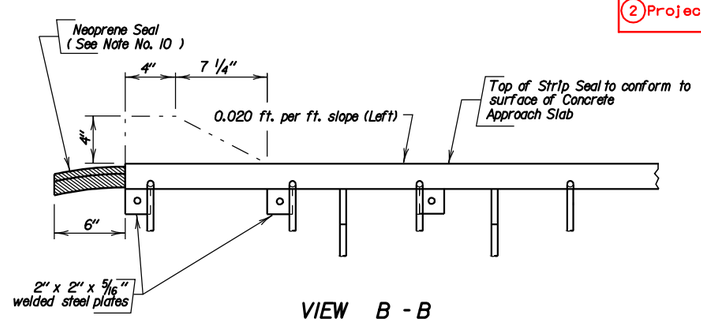

VIEW B - B

REQUIRED LIST

1. Title Block
2. Project Block
3. Fill out Remainder of Standard Base Sheet

ESTIMATED QUANTITIES

(For Two Approach Slabs)

ITEM	UNIT	QUANTITY
Strip Seal Expansion Joint	Ft.	116.5

1

APPROACH SLAB JOINT DETAILS

FOR

(NORTHBOUND LANES)

374'-0" CONT. COMP. GIRDER BRIDGE

56'-0" ROADWAY — SEC. 13/24-T101N-R50W

OVER 12th STREET — 0° SKEW

STR. NO. 50-176-210 — IM 29-3(76) 78

STA. 84+32.70 TO STA. 88+06.70 — HS25-44 (& ALT.)

MINNEHAHA COUNTY

S. D. DEPT. OF TRANSPORTATION

DECEMBER 2003 — 25 OF 30

DESIGNED BY	DRAWN BY	CHECKED BY	APPROVED
HE	BK	DC	John C. Cole
STEEL	STEEL 20		BRIDGE ENGINEER

STATE OF	PROJECT	SHEET NO.	TOTAL SHEETS
S.D.	Reference		

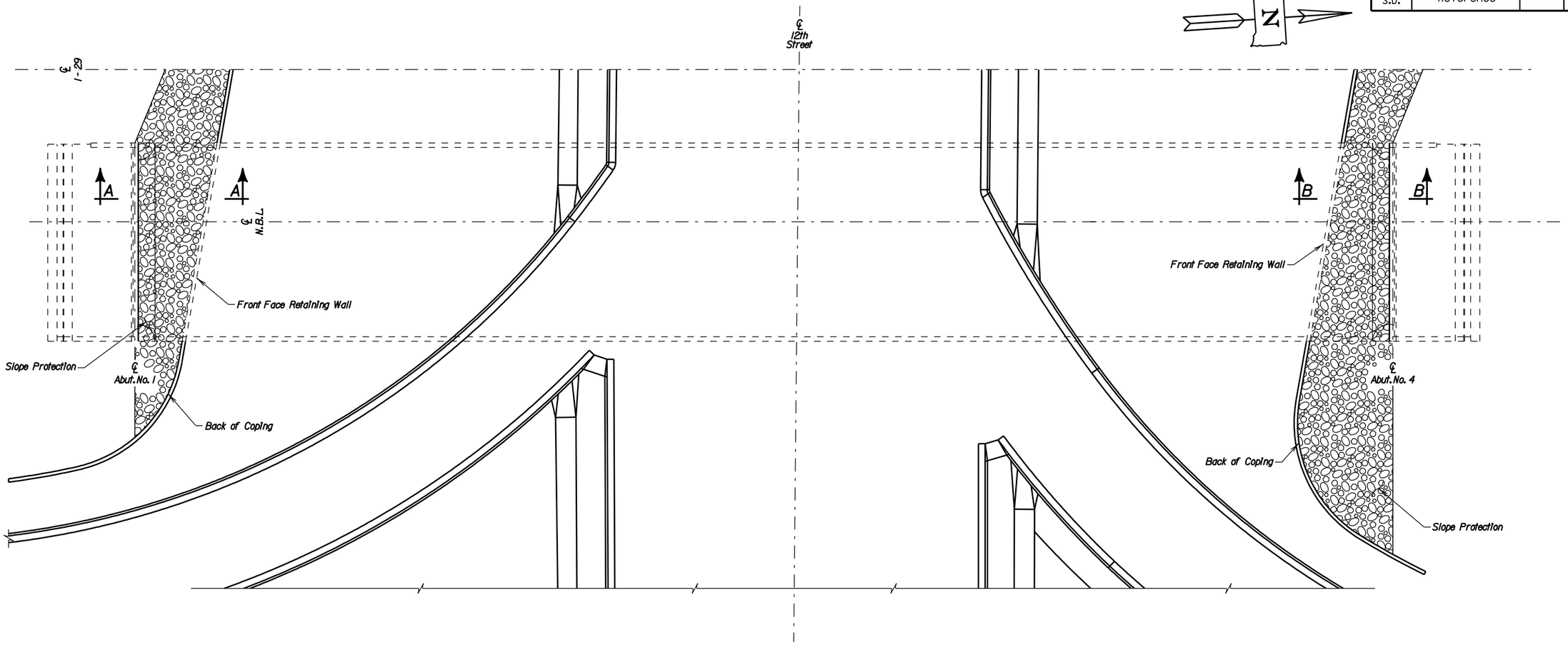

4 PLAN

REQUIRED LIST	
1 Title Block	4 Plan View
2 Project Block	5 Sections as Required
3 Estimated Quantities	

3

ESTIMATED QUANTITIES		
ITEM	UNIT	QUANTITY
Bridge Berm Slope Protection, Crushed Aggregate	Sq. Yd.	521

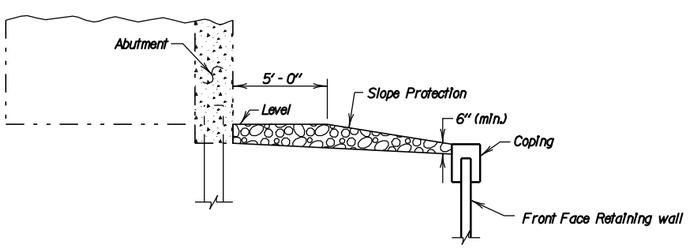

5 SEC. A-A

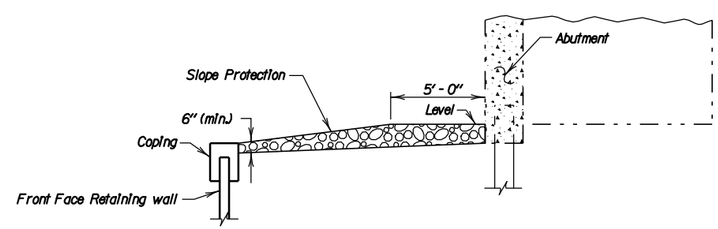

5 SEC. B-B

1 SLOPE PROTECTION DETAILS
FOR
(NORTHBOUND LANES)

374'-0" CONT. COMP. GIRDER BRIDGE

56'-0" ROADWAY — SEC. 13/24-T101N-R50W
OVER 12th STREET — 0° SKEW
STR. NO. 50-176-210 — IM 29-3(76) 78
STA. 84+32.70 TO STA. 88+06.70 — HS25-44 (& ALT.)

MINNEHAHA COUNTY
S. D. DEPT. OF TRANSPORTATION
DECEMBER 2003 26 OF 30

DESIGNED BY	DRAWN BY	CHECKED BY	APPROVED
HE	BK	DC	John C. Cole
STEEL	STEEL 21		BRIDGE ENGINEER

STATE OF	PROJECT	SHEET NO.	TOTAL SHEETS
S.D.	Reference		

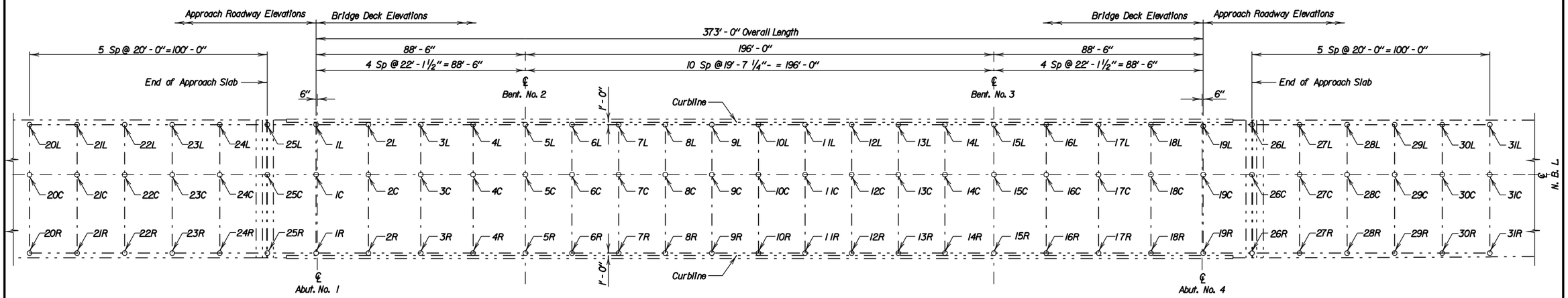

4 PLAN

NOTE -
The Contractor shall be responsible for producing the As - Built Elevation Survey soon after construction is complete and before the bridge is opened to traffic. The As - Built Elevations of the Bridge shall be taken and recorded at the locations shown by the table on this sheet. The completed table shall be given to the Engineer who will forward a copy to the Office of Bridge Design and the Region Office.

The elevations to be recorded in these tables shall be based on the National Geodetic Survey (NGS) North American Vertical Datum of 1988 (NAVD88).

REQUIRED LIST

1. Title Block
2. Project Block
3. Estimate of Quantities
4. Plan View
5. Table for Shot Elevations
6. Bridge Survey Marker Table

6

Elevation - Bridge Survey Markers		
Location	Station - Offset	Elevation
Begin Bridge		
End Bridge		

3

ESTIMATED QUANTITIES		
ITEM	UNIT	QUANTITY
Bridge Elevation Survey	L.S.	Lump Sum

5

Table of Elevations - Bridge Deck					
Location	Elevation	Location	Elevation	Location	Elevation
1L		1C		1R	
2L		2C		2R	
3L		3C		3R	
4L		4C		4R	
5L		5C		5R	
6L		6C		6R	
7L		7C		7R	
8L		8C		8R	
9L		9C		9R	
10L		10C		10R	
11L		11C		11R	
12L		12C		12R	
13L		13C		13R	
14L		14C		14R	
15L		15C		15R	

5

Table of Elevations - Approach Roadway					
Location	Elevation	Location	Elevation	Location	Elevation
16L		16C		16R	
17L		17C		17R	
18L		18C		18R	
19L		19C		19R	
20L		20C		20R	
21L		21C		21R	
22L		22C		22R	
23L		23C		23R	
24L		24C		24R	
25L		25C		25R	
26L		26C		26R	
27L		27C		27R	
28L		28C		28R	
29L		29C		29R	

1 AS-BUILT ELEVATION SURVEY
FOR
(NORTHBOUND LANES)

374'-0" CONT. COMP. GIRDER BRIDGE

56'-0" ROADWAY — SEC. 13/24-T101N-R50W
OVER 12th STREET — 0° SKEW
STR. NO. 50-176-210 — IM 29-3(76) 78
STA. 84+32.70 TO STA. 88+06.70 — HS25-44
(& ALT.)

MINNEHAHA COUNTY
S. D. DEPT. OF TRANSPORTATION
DECEMBER 2003 27 OF 30

DESIGNED BY	DRAWN BY	CHECKED BY	APPROVED
HE	BK	DC	John C. Cole
STEEL	STEEL 22		BRIDGE ENGINEER

STATE OF	PROJECT	SHEET NO.	TOTAL SHEETS
S.D.	Reference		

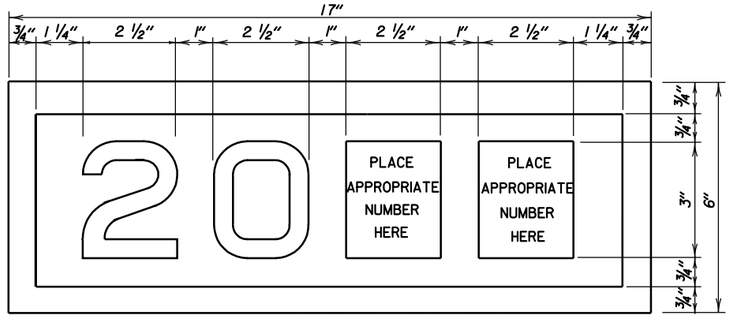

YEAR PLATE DETAILS

NOTES:

1. Year plates of the general dimensions shown shall be constructed on all box culverts and bridges. The year plates shall be constructed in reverse and attached to the forms in such a manner that the finished imprint in the concrete does not exceed one-half (1/2) inch in depth.

2. Year plates shall be located on structure (s) as follows:

   a. On cast-in-place box culverts the year plates shall be four and one - half (4 1/2) inches below the top of the upstream parapet wall and centered laterally on the upstream face. On precast box culverts the year plate shall be centered laterally on the upstream face of the top slab. Where an extended interior wall interferes with this location, the year plate shall be centered in an adjacent barrel.

   b. On bridges with six (6) inch curbs or "Jersey" shaped barriers with no endblocks, the year plate shall be centered vertically on the curb face approximately six (6) inches from the end of the bridge, or as designated by the Engineer. On bridges with "Jersey" shaped barrier endblocks, the year plate shall be centered on the upper sloped portion of the barrier approximately 5'- 6" from the end of the bridge, or as designated by the Engineer. There shall be one year plate at each end of the bridge on opposite sides.

   c. When the plans specify that both the original date of construction and the date of reconstruction are to be shown, one date shall be placed as listed above and the other located adjacent to it. Both year plates shall be shown at each end of the bridge on opposite sides.

3. There will be no separate measurement or payment made for year plates on box culverts and bridges. All costs for this work shall be incidental to the other contract items.

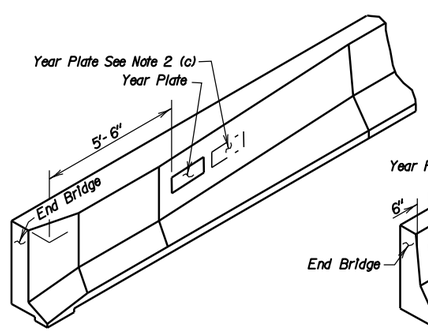

JERSEY BARRIER
(With Endblock)

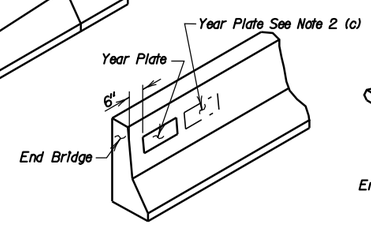

JERSEY BARRIER

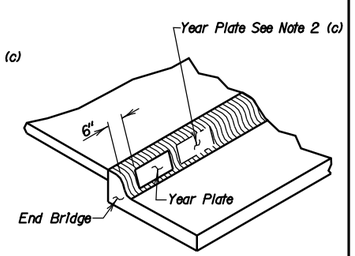

TYPE B CURB

March 31, 2000

Published Date: 4th Qtr. 2008	SDDOT	YEAR PLATE DETAILS	PLATE NUMBER 460.02
			Sheet 1 of 1

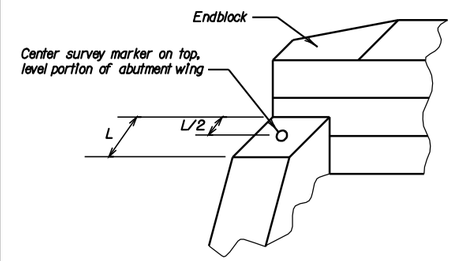

ABUTMENT WITH "STRAIGHT" WINGS

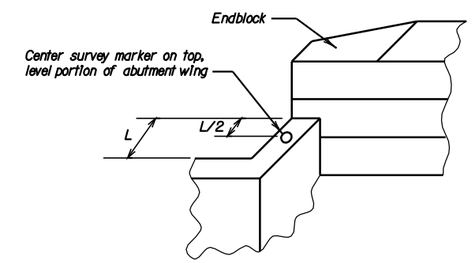

ABUTMENT WITH "SWEPT BACK" WINGS

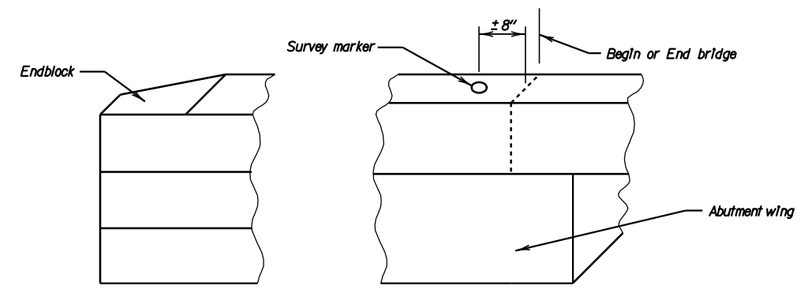

ABUTMENT WITH "SWEPT BACK" WINGS
(Endblock on top of wings)

NOTES:

1. Survey markers shall be located at each abutment on the same side of the bridge as the year plate. Place survey markers on abutment wings as shown. Two survey markers will be required at each bridge.

2. Survey markers shall be of a type intended for installation in concrete, be made of solid brass or bronze, have a domed top and be either a 3" top diameter (with a 3/4" X 2" long ribbed shank), or a US Army Corps of Engineers Type C Disc with a 3 1/2" top diameter.

3. There will be no separate measurement or payment made for survey markers. All costs for this work shall be incidental to the other contract items.

February 19, 2001

Published Date: 4th Qtr. 2008	SDDOT	BRIDGE SURVEY MARKER	PLATE NUMBER 460.05
			Sheet 1 of 1

REQUIRED LIST
1. Title Block
2. Project Block
3. Insert Required Standard Plate Sheets as Needed

374' - 0" CONT. COMP. GIRDER BRIDGE
STR. NO. 50-176-210
DECEMBER 2003

STEEL 23